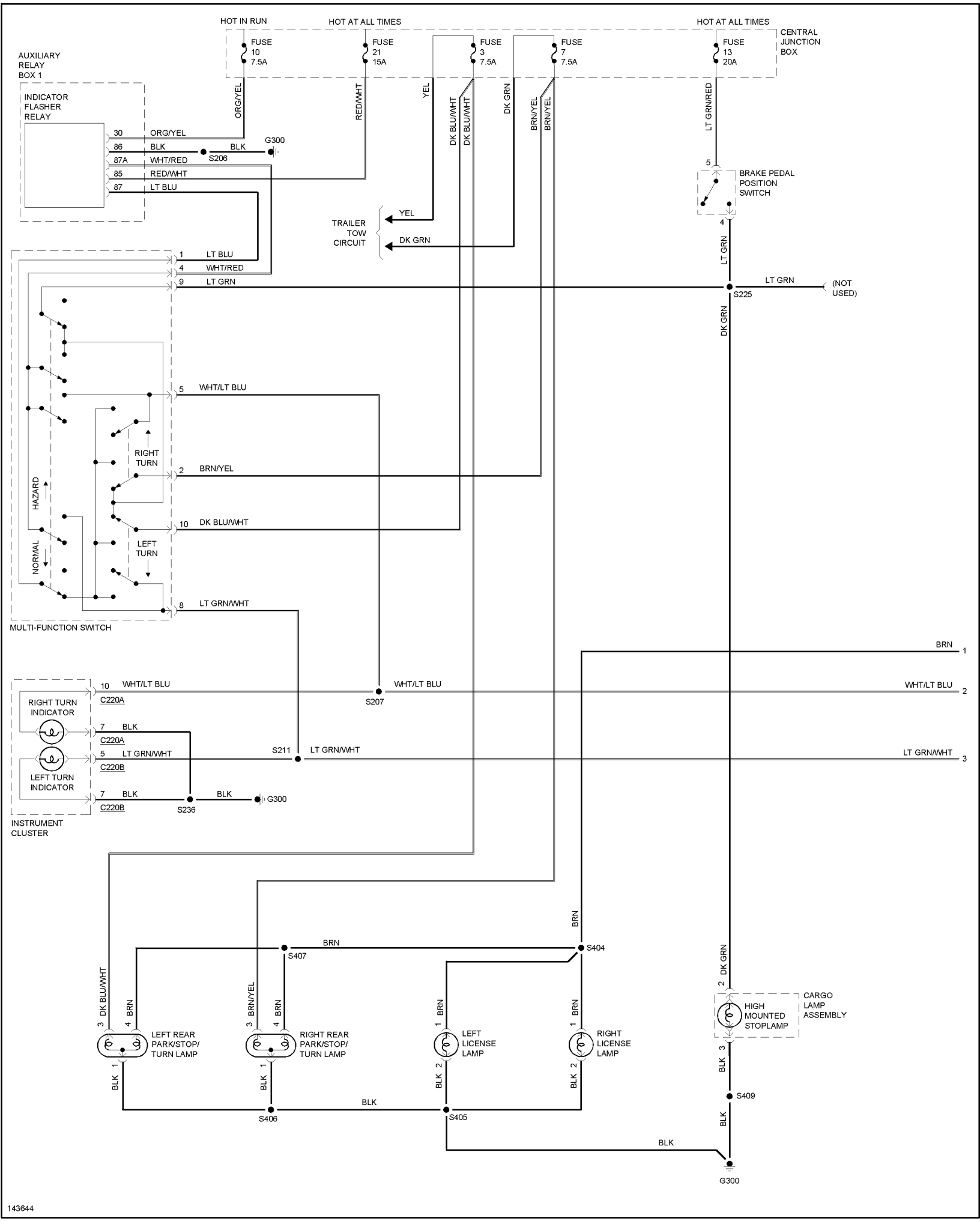
HOT IN RUN
HOT AT ALL TIMES
HOT AT ALL TIMES
CENTRAL JUNCTION BOX
FUSE 10 7.5A
FUSE 21 15A
FUSE 3 7.5A
FUSE 7 7.5A
FUSE 13 20A
AUXILIARY RELAY BOX 1
INDICATOR FLASHER RELAY
30 ORG/YEL
86 BLK
87A WHT/RED
85 RED/WHT
87 LT BLU
BLK
G300
S206
ORG/YEL
RED/WHT
YEL
DK BLU/WHT
DK BLU/WHT
DK GRN
BRN/YEL
BRN/YEL
LT GRN/RED
5
BRAKE PEDAL POSITION SWITCH
4
TRAILER TOW CIRCUIT
YEL
DK GRN
LT GRN
1 LT BLU
4 WHT/RED
9 LT GRN
LT GRN
(NOT USED)
S225
DK GRN
5 WHT/LT BLU
RIGHT TURN
2 BRN/YEL
HAZARD
10 DK BLU/WHT
LEFT TURN
NORMAL
8 LT GRN/WHT
MULTI-FUNCTION SWITCH
BRN
1
10 WHT/LT BLU
C220A
S207
WHT/LT BLU
WHT/LT BLU
2
RIGHT TURN INDICATOR
7 BLK
C220A
S211
LT GRN/WHT
LT GRN/WHT
LT GRN/WHT
3
5 LT GRN/WHT
C220B
LEFT TURN INDICATOR
7 BLK
C220B
S236
BLK
G300
INSTRUMENT CLUSTER
BRN
BRN
S407
S404
DK BLU/WHT
BRN
BRN/YEL
BRN
BRN
BRN
DK GRN
2
CARGO LAMP ASSEMBLY
HIGH MOUNTED STOPLAMP
LEFT REAR PARK/STOP/ TURN LAMP
RIGHT REAR PARK/STOP/ TURN LAMP
LEFT LICENSE LAMP
RIGHT LICENSE LAMP
BLK
BLK
BLK
BLK
BLK
BLK
BLK
S406
BLK
S405
S409
BLK
BLK
G300
143644