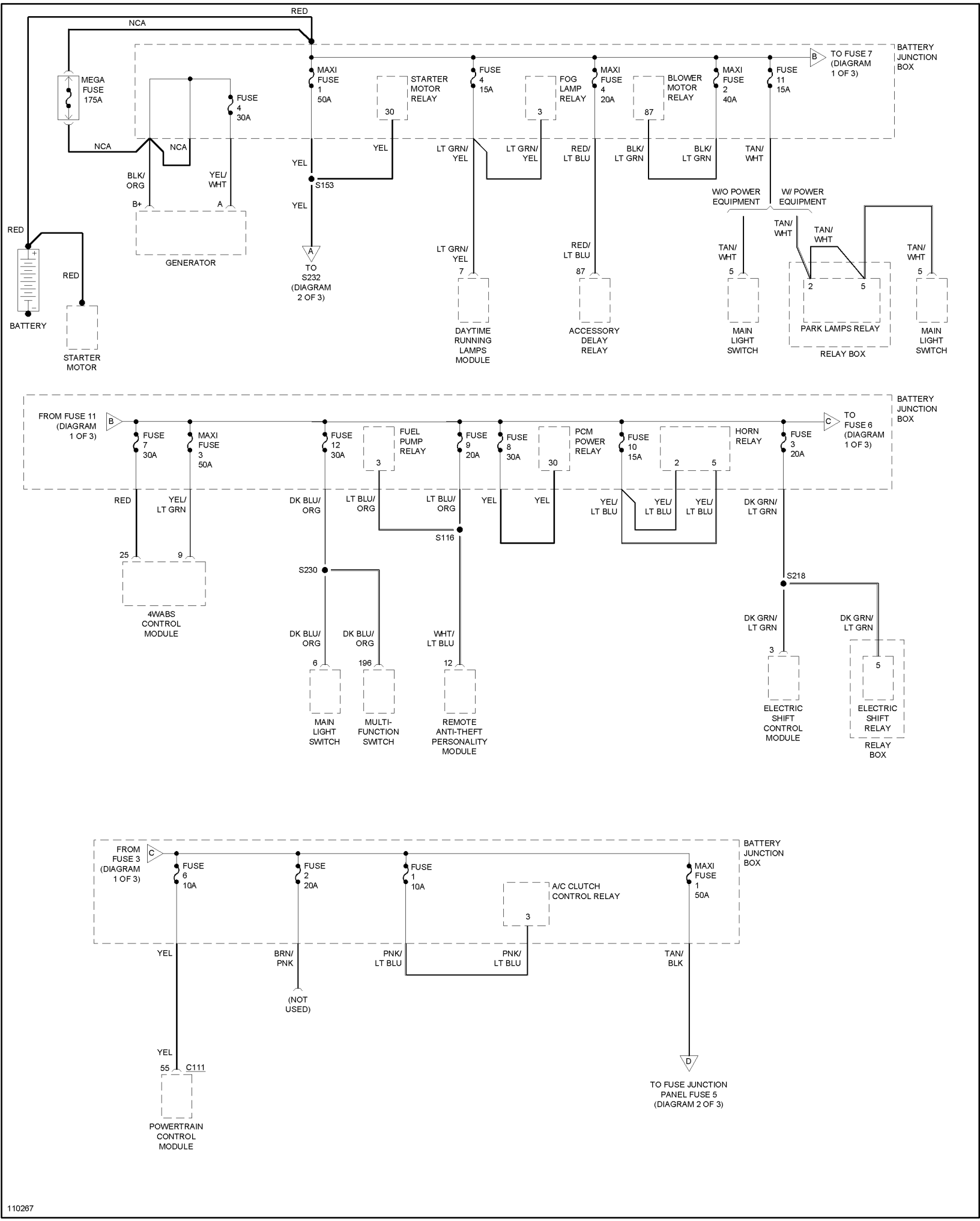
RED
NCA
BATTERY JUNCTION BOX
MEGA FUSE 175A
NCA
NCA
FUSE 4 30A
MAXI FUSE 1 50A
STARTER MOTOR RELAY
30
FUSE 4 15A
FOG LAMP RELAY
3
MAXI FUSE 4 20A
BLOWER MOTOR RELAY
87
MAXI FUSE 2 40A
FUSE 11 15A
B
TO FUSE 7 (DIAGRAM 1 OF 3)
YEL
YEL
LT GRN/ YEL
LT GRN/ YEL
RED/ LT BLU
BLK/ LT GRN
BLK/ LT GRN
TAN/ WHT
BLK/ ORG
YEL/ WHT
B+
A
GENERATOR
YEL
S153
A
TO S232 (DIAGRAM 2 OF 3)
W/O POWER EQUIPMENT
W/ POWER EQUIPMENT
TAN/ WHT
TAN/ WHT
TAN/ WHT
TAN/ WHT
5
2
5
5
RED
RED
BATTERY
STARTER MOTOR
LT GRN/ YEL
7
DAYTIME RUNNING LAMPS MODULE
RED/ LT BLU
87
ACCESSORY DELAY RELAY
MAIN LIGHT SWITCH
PARK LAMPS RELAY
RELAY BOX
MAIN LIGHT SWITCH
BATTERY JUNCTION BOX
FROM FUSE 11 (DIAGRAM 1 OF 3)
B
FUSE 7 30A
MAXI FUSE 3 50A
FUSE 12 30A
FUEL PUMP RELAY
3
FUSE 9 20A
FUSE 8 30A
PCM POWER RELAY
30
FUSE 10 15A
HORN RELAY
2
5
FUSE 3 20A
C
TO FUSE 6 (DIAGRAM 1 OF 3)
RED
YEL/ LT GRN
DK BLU/ ORG
LT BLU/ ORG
LT BLU/ ORG
YEL
YEL
YEL/ LT BLU
YEL/ LT BLU
YEL/ LT BLU
DK GRN/ LT GRN
S116
25
9
S230
S218
4WABS CONTROL MODULE
DK BLU/ ORG
DK BLU/ ORG
WHT/ LT BLU
DK GRN/ LT GRN
DK GRN/ LT GRN
6
196
12
3
5
MAIN LIGHT SWITCH
MULTI-FUNCTION SWITCH
REMOTE ANTI-THEFT PERSONALITY MODULE
ELECTRIC SHIFT CONTROL MODULE
ELECTRIC SHIFT RELAY
RELAY BOX
BATTERY JUNCTION BOX
FROM FUSE 3 (DIAGRAM 1 OF 3)
C
FUSE 6 10A
FUSE 2 20A
FUSE 1 10A
A/C CLUTCH CONTROL RELAY
3
MAXI FUSE 1 50A
YEL
BRN/ PNK
PNK/ LT BLU
PNK/ LT BLU
TAN/ BLK
(NOT USED)
YEL
55
C111
POWERTRAIN CONTROL MODULE
D
TO FUSE JUNCTION PANEL FUSE 5 (DIAGRAM 2 OF 3)
110267