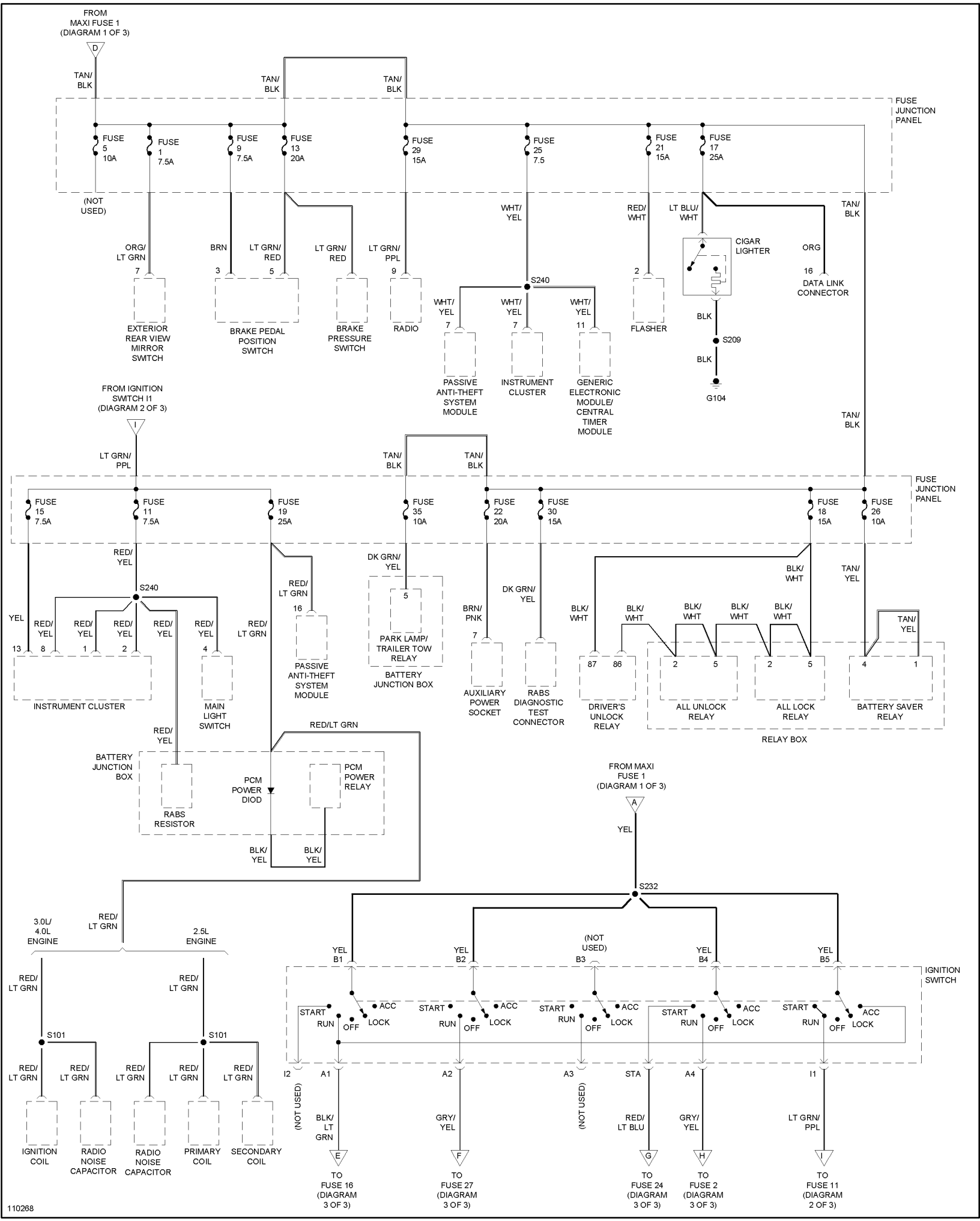
FROM MAXI FUSE 1 (DIAGRAM 1 OF 3)
D
TAN/BLK
TAN/BLK
TAN/BLK
FUSE JUNCTION PANEL
FUSE 5 10A
FUSE 1 7.5A
FUSE 9 7.5A
FUSE 13 20A
FUSE 29 15A
FUSE 25 7.5
FUSE 21 15A
FUSE 17 25A
(NOT USED)
ORG/LT GRN
7
EXTERIOR REAR VIEW MIRROR SWITCH
BRN
3
BRAKE PEDAL POSITION SWITCH
LT GRN/RED
5
LT GRN/RED
BRAKE PRESSURE SWITCH
LT GRN/PPL
9
RADIO
WHT/YEL
S240
WHT/YEL
7
PASSIVE ANTI-THEFT SYSTEM MODULE
WHT/YEL
7
INSTRUMENT CLUSTER
WHT/YEL
11
GENERIC ELECTRONIC MODULE/ CENTRAL TIMER MODULE
RED/WHT
2
FLASHER
LT BLU/WHT
CIGAR LIGHTER
BLK
S209
BLK
G104
TAN/BLK
ORG
16
DATA LINK CONNECTOR
TAN/BLK
FROM IGNITION SWITCH I1 (DIAGRAM 2 OF 3)
I
LT GRN/PPL
TAN/BLK
TAN/BLK
FUSE JUNCTION PANEL
FUSE 15 7.5A
FUSE 11 7.5A
FUSE 19 25A
FUSE 35 10A
FUSE 22 20A
FUSE 30 15A
FUSE 18 15A
FUSE 26 10A
RED/YEL
S240
YEL
RED/YEL
13
RED/YEL
8
RED/YEL
1
RED/YEL
2
RED/YEL
RED/YEL
4
INSTRUMENT CLUSTER
MAIN LIGHT SWITCH
RED/LT GRN
RED/LT GRN
16
PASSIVE ANTI-THEFT SYSTEM MODULE
DK GRN/YEL
5
PARK LAMP/ TRAILER TOW RELAY
BATTERY JUNCTION BOX
BRN/PNK
7
AUXILIARY POWER SOCKET
DK GRN/YEL
RABS DIAGNOSTIC TEST CONNECTOR
BLK/WHT
87
DRIVER'S UNLOCK RELAY
BLK/WHT
86
BLK/WHT
2
5
ALL UNLOCK RELAY
BLK/WHT
BLK/WHT
2
5
ALL LOCK RELAY
BLK/WHT
TAN/YEL
4
1
BATTERY SAVER RELAY
RELAY BOX
TAN/YEL
RED/YEL
BATTERY JUNCTION BOX
RABS RESISTOR
PCM POWER DIOD
PCM POWER RELAY
RED/LT GRN
BLK/YEL
BLK/YEL
FROM MAXI FUSE 1 (DIAGRAM 1 OF 3)
A
YEL
S232
3.0L/ 4.0L ENGINE
RED/LT GRN
2.5L ENGINE
RED/LT GRN
RED/LT GRN
S101
RED/LT GRN
RED/LT GRN
IGNITION COIL
RADIO NOISE CAPACITOR
S101
RED/LT GRN
RED/LT GRN
RADIO NOISE CAPACITOR
RED/LT GRN
PRIMARY COIL
RED/LT GRN
SECONDARY COIL
YEL B1
YEL B2
(NOT USED) B3
YEL B4
YEL B5
IGNITION SWITCH
START RUN OFF ACC LOCK
START RUN OFF ACC LOCK
START RUN OFF ACC LOCK
START RUN OFF ACC LOCK
START RUN OFF ACC LOCK
I2
(NOT USED)
A1
BLK/LT GRN
E
TO FUSE 16 (DIAGRAM 3 OF 3)
A2
GRY/YEL
F
TO FUSE 27 (DIAGRAM 3 OF 3)
A3
(NOT USED)
STA
RED/LT BLU
G
TO FUSE 24 (DIAGRAM 3 OF 3)
A4
GRY/YEL
H
TO FUSE 2 (DIAGRAM 3 OF 3)
I1
LT GRN/PPL
I
TO FUSE 11 (DIAGRAM 2 OF 3)
110268