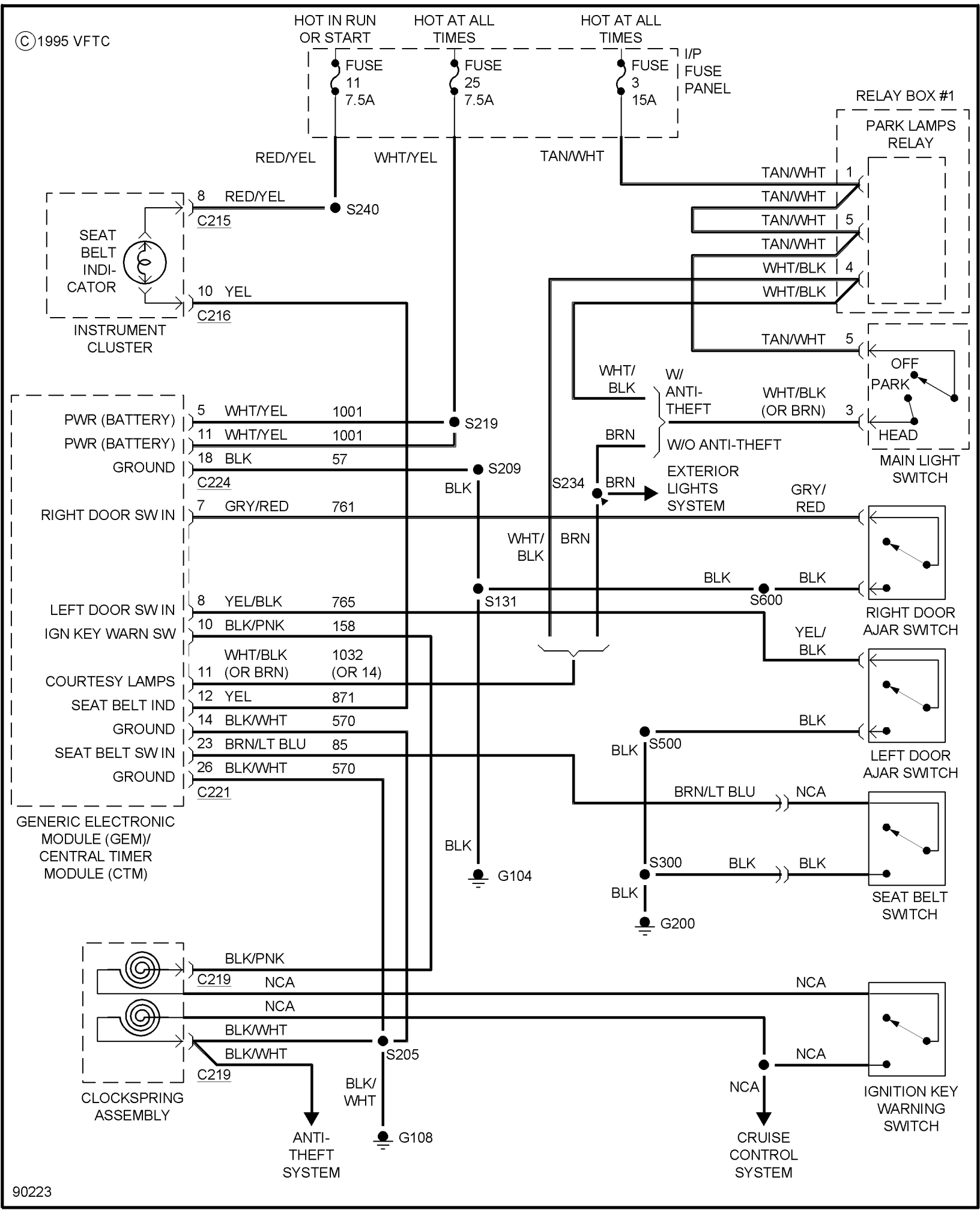
©1995 VFTC
HOT IN RUN OR START
HOT AT ALL TIMES
HOT AT ALL TIMES
FUSE 11 7.5A
FUSE 25 7.5A
FUSE 3 15A
I/P FUSE PANEL
RELAY BOX #1
PARK LAMPS RELAY
RED/YEL
WHT/YEL
TAN/WHT
TAN/WHT 1
TAN/WHT
TAN/WHT 5
TAN/WHT
WHT/BLK 4
WHT/BLK
8 RED/YEL
S240
C215
SEAT BELT INDI-CATOR
10 YEL
C216
INSTRUMENT CLUSTER
TAN/WHT 5
OFF
PARK
HEAD
MAIN LIGHT SWITCH
WHT/BLK
W/ ANTI-THEFT
WHT/BLK (OR BRN) 3
BRN
W/O ANTI-THEFT
PWR (BATTERY) 5 WHT/YEL 1001
PWR (BATTERY) 11 WHT/YEL 1001
S219
GROUND 18 BLK 57
C224
S209
BLK
S234
BRN
EXTERIOR LIGHTS SYSTEM
GRY/RED
RIGHT DOOR SW IN 7 GRY/RED 761
WHT/BLK
BRN
BLK
BLK
S131
S600
RIGHT DOOR AJAR SWITCH
LEFT DOOR SW IN 8 YEL/BLK 765
IGN KEY WARN SW 10 BLK/PNK 158
YEL/BLK
COURTESY LAMPS 11 WHT/BLK (OR BRN) 1032 (OR 14)
SEAT BELT IND 12 YEL 871
GROUND 14 BLK/WHT 570
SEAT BELT SW IN 23 BRN/LT BLU 85
GROUND 26 BLK/WHT 570
C221
GENERIC ELECTRONIC MODULE (GEM)/ CENTRAL TIMER MODULE (CTM)
BLK
S500
BLK
LEFT DOOR AJAR SWITCH
BRN/LT BLU
NCA
BLK
G104
S300
BLK
BLK
BLK
G200
SEAT BELT SWITCH
BLK/PNK
C219
NCA
NCA
NCA
BLK/WHT
BLK/WHT
S205
C219
CLOCKSPRING ASSEMBLY
BLK/ WHT
NCA
NCA
IGNITION KEY WARNING SWITCH
ANTI-THEFT SYSTEM
G108
CRUISE CONTROL SYSTEM
90223