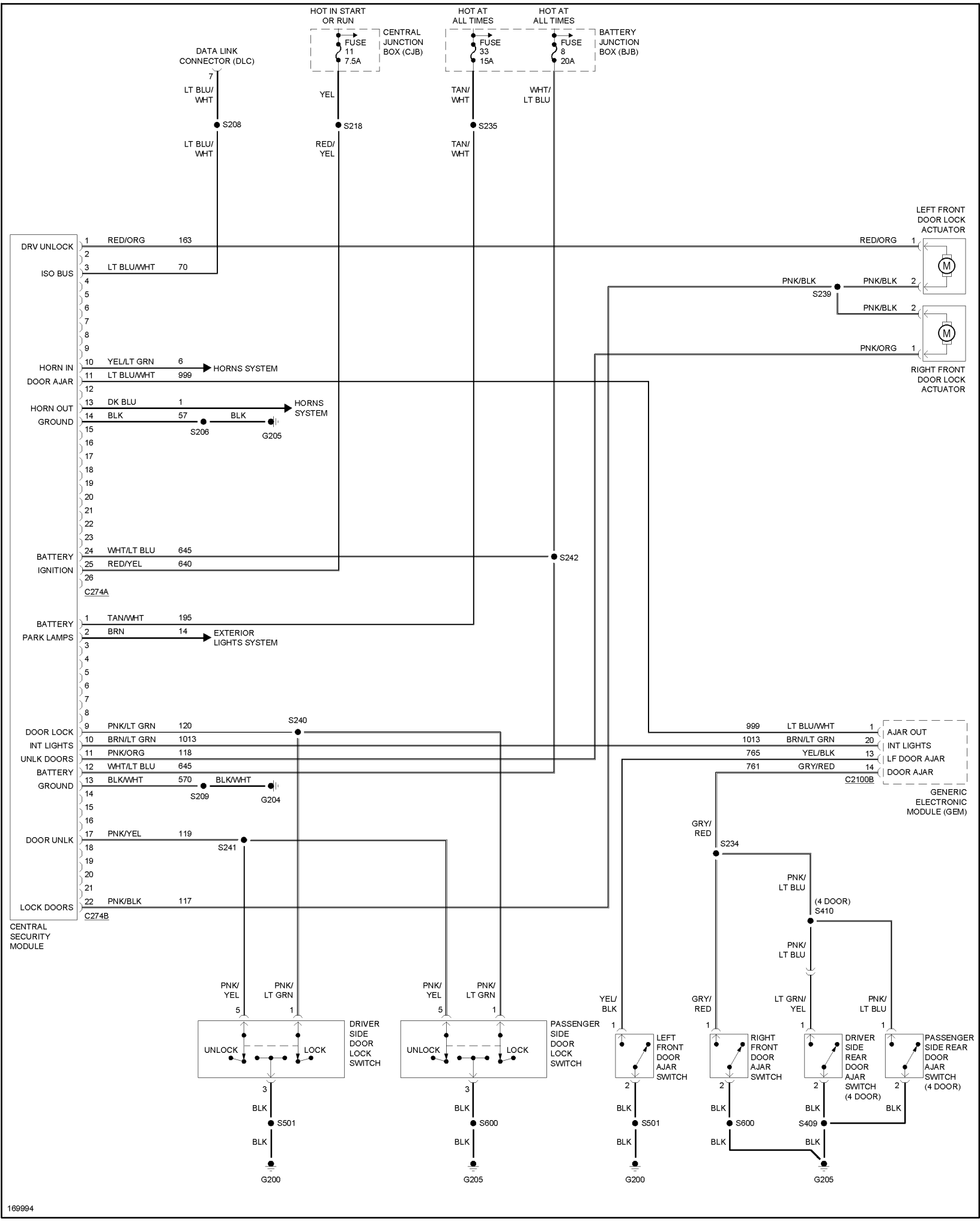
HOT IN START OR RUN
FUSE 11 7.5A
CENTRAL JUNCTION BOX (CJB)
HOT AT ALL TIMES
FUSE 33 15A
HOT AT ALL TIMES
FUSE 8 20A
BATTERY JUNCTION BOX (BJB)
DATA LINK CONNECTOR (DLC)
7
LT BLU/ WHT
S208
LT BLU/ WHT
YEL
S218
RED/ YEL
TAN/ WHT
S235
TAN/ WHT
WHT/ LT BLU
LEFT FRONT DOOR LOCK ACTUATOR
DRV UNLOCK
1 RED/ORG 163
RED/ORG 1
ISO BUS
3 LT BLU/WHT 70
PNK/BLK
S239
PNK/BLK 2
PNK/BLK 2
PNK/ORG 1
RIGHT FRONT DOOR LOCK ACTUATOR
HORN IN
10 YEL/LT GRN 6
HORNS SYSTEM
DOOR AJAR
11 LT BLU/WHT 999
HORN OUT
13 DK BLU 1
HORNS SYSTEM
GROUND
14 BLK 57
BLK
S206
G205
BATTERY IGNITION
24 WHT/LT BLU 645
25 RED/YEL 640
S242
C274A
BATTERY PARK LAMPS
1 TAN/WHT 195
2 BRN 14
EXTERIOR LIGHTS SYSTEM
DOOR LOCK
9 PNK/LT GRN 120
S240
INT LIGHTS
10 BRN/LT GRN 1013
UNLK DOORS
11 PNK/ORG 118
BATTERY
12 WHT/LT BLU 645
GROUND
13 BLK/WHT 570
BLK/WHT
S209
G204
999 LT BLU/WHT 1
1013 BRN/LT GRN 20
765 YEL/BLK 13
761 GRY/RED 14
AJAR OUT
INT LIGHTS
LF DOOR AJAR
DOOR AJAR
C2100B
GENERIC ELECTRONIC MODULE (GEM)
DOOR UNLK
17 PNK/YEL 119
S241
LOCK DOORS
22 PNK/BLK 117
C274B
CENTRAL SECURITY MODULE
GRY/ RED
S234
PNK/ LT BLU
(4 DOOR) S410
PNK/ LT BLU
PNK/ YEL
PNK/ LT GRN
5
1
UNLOCK
LOCK
DRIVER SIDE DOOR LOCK SWITCH
3
BLK
S501
BLK
G200
PNK/ YEL
PNK/ LT GRN
PASSENGER SIDE DOOR LOCK SWITCH
BLK
S600
BLK
G205
YEL/ BLK
LEFT FRONT DOOR AJAR SWITCH
BLK
S501
BLK
G200
GRY/ RED
RIGHT FRONT DOOR AJAR SWITCH
BLK
S600
BLK
G205
LT GRN/ YEL
DRIVER SIDE REAR DOOR AJAR SWITCH (4 DOOR)
BLK
S409
BLK
PNK/ LT BLU
PASSENGER SIDE REAR DOOR AJAR SWITCH (4 DOOR)
BLK
169994