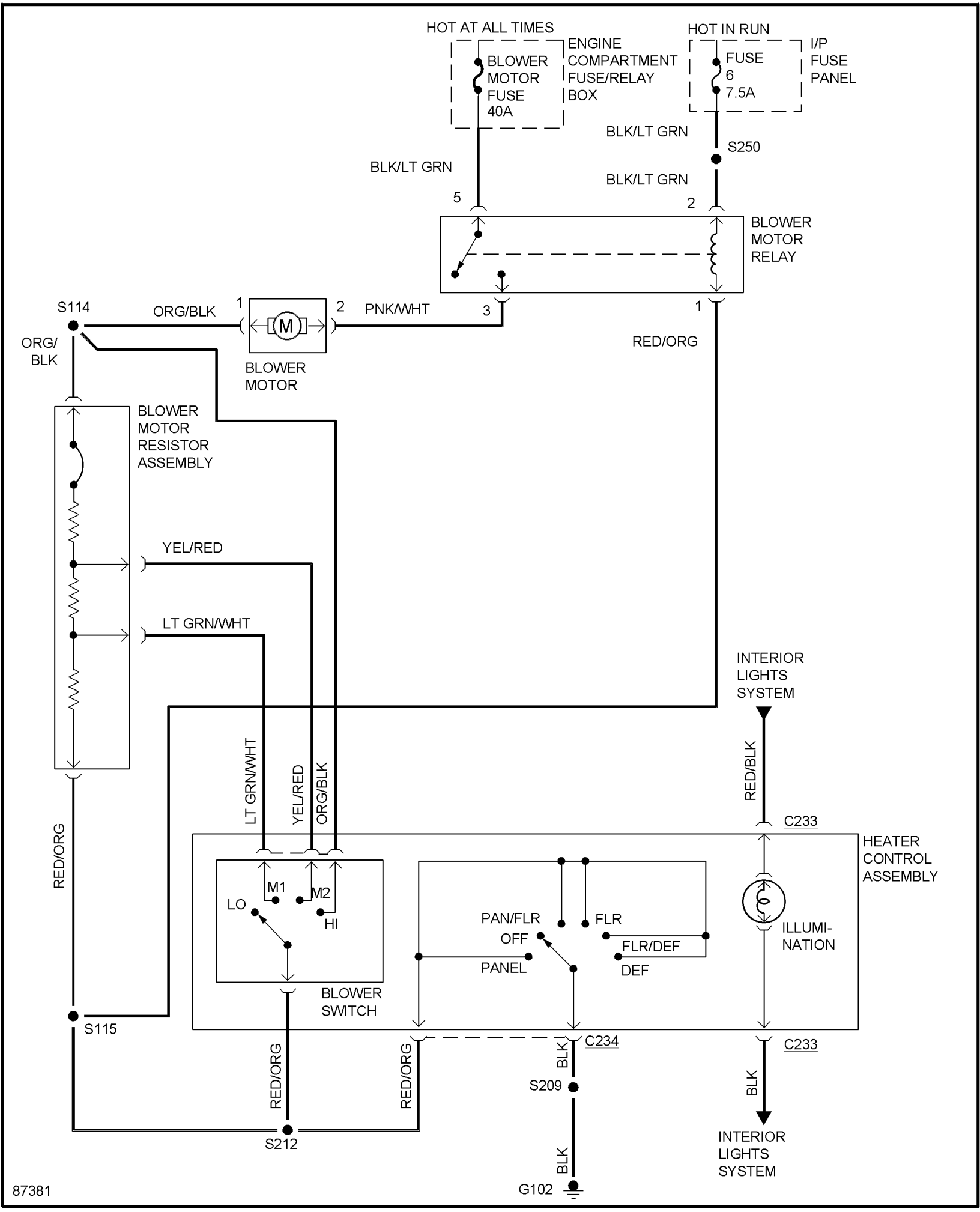
HOT AT ALL TIMES
ENGINE COMPARTMENT FUSE/RELAY BOX
BLOWER MOTOR FUSE 40A
HOT IN RUN
I/P FUSE PANEL
FUSE 6 7.5A
BLK/LT GRN
S250
BLK/LT GRN
BLK/LT GRN
5
2
BLOWER MOTOR RELAY
S114
ORG/BLK
1
2
PNK/WHT
3
1
RED/ORG
ORG/ BLK
BLOWER MOTOR
BLOWER MOTOR RESISTOR ASSEMBLY
YEL/RED
LT GRN/WHT
INTERIOR LIGHTS SYSTEM
RED/BLK
C233
LT GRN/WHT
YEL/RED
ORG/BLK
RED/ORG
HEATER CONTROL ASSEMBLY
M1
M2
LO
HI
PAN/FLR
OFF
FLR
FLR/DEF
PANEL
DEF
ILLUMI-NATION
BLOWER SWITCH
S115
C234
C233
BLK
S209
BLK
RED/ORG
RED/ORG
S212
BLK
INTERIOR LIGHTS SYSTEM
G102
87381