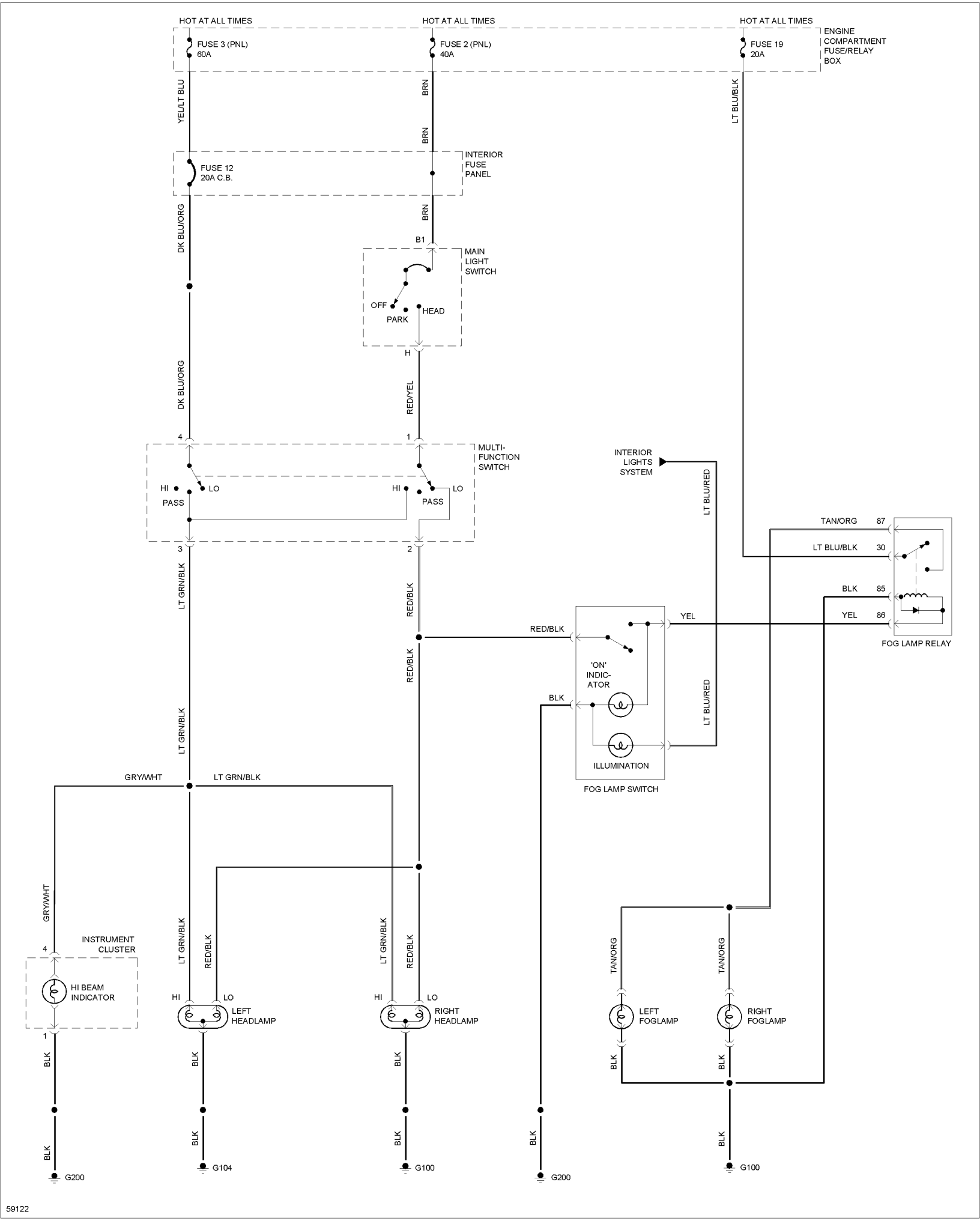
HOT AT ALL TIMES
HOT AT ALL TIMES
HOT AT ALL TIMES
FUSE 3 (PNL) 60A
FUSE 2 (PNL) 40A
FUSE 19 20A
ENGINE COMPARTMENT FUSE/RELAY BOX
YEL/LT BLU
BRN
BRN
LT BLU/BLK
FUSE 12 20A C.B.
INTERIOR FUSE PANEL
DK BLU/ORG
BRN
B1
MAIN LIGHT SWITCH
OFF
PARK
HEAD
H
DK BLU/ORG
RED/YEL
4
1
MULTI-FUNCTION SWITCH
HI
LO
PASS
HI
LO
PASS
3
2
INTERIOR LIGHTS SYSTEM
LT BLU/RED
TAN/ORG
87
LT BLU/BLK
30
BLK
85
YEL
86
FOG LAMP RELAY
LT GRN/BLK
RED/BLK
RED/BLK
YEL
RED/BLK
'ON' INDIC-ATOR
BLK
LT BLU/RED
LT GRN/BLK
ILLUMINATION
FOG LAMP SWITCH
GRY/WHT
LT GRN/BLK
GRY/WHT
INSTRUMENT CLUSTER
4
HI BEAM INDICATOR
1
LT GRN/BLK
RED/BLK
HI
LO
LEFT HEADLAMP
LT GRN/BLK
RED/BLK
HI
LO
RIGHT HEADLAMP
TAN/ORG
TAN/ORG
LEFT FOGLAMP
RIGHT FOGLAMP
BLK
BLK
BLK
BLK
BLK
BLK
BLK
BLK
BLK
G200
G104
G100
G200
G100
59122