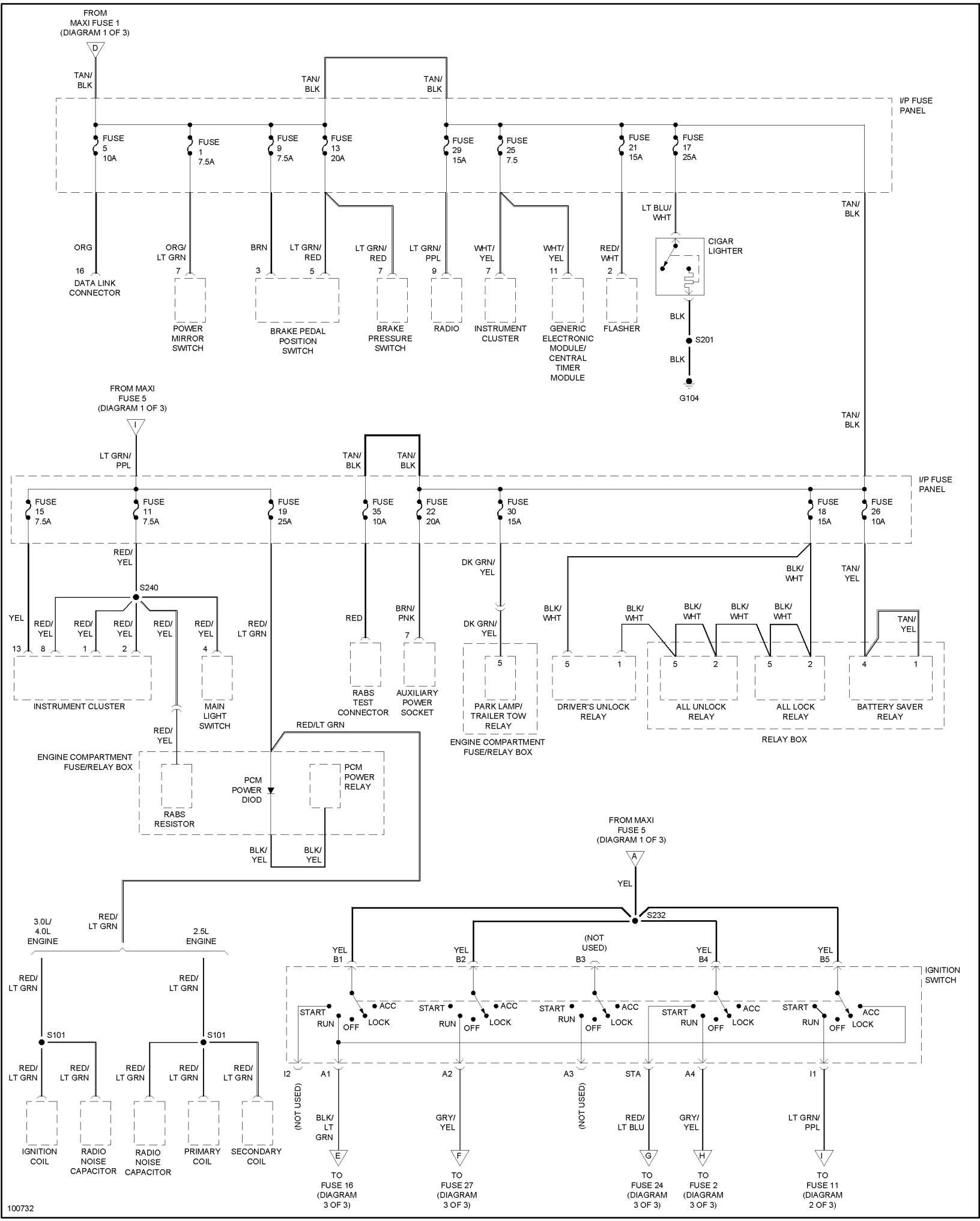
FROM MAXI FUSE 1 (DIAGRAM 1 OF 3)
D
TAN/BLK
I/P FUSE PANEL
FUSE 5 10A
FUSE 1 7.5A
FUSE 9 7.5A
FUSE 13 20A
FUSE 29 15A
FUSE 25 7.5
FUSE 21 15A
FUSE 17 25A
ORG
16
DATA LINK CONNECTOR
ORG/LT GRN
7
POWER MIRROR SWITCH
BRN
3
BRAKE PEDAL POSITION SWITCH
LT GRN/RED
5
7
BRAKE PRESSURE SWITCH
LT GRN/PPL
9
RADIO
WHT/YEL
7
11
INSTRUMENT CLUSTER
GENERIC ELECTRONIC MODULE/ CENTRAL TIMER MODULE
RED/WHT
2
FLASHER
LT BLU/WHT
CIGAR LIGHTER
BLK
S201
G104
FROM MAXI FUSE 5 (DIAGRAM 1 OF 3)
I
LT GRN/PPL
FUSE 15 7.5A
FUSE 11 7.5A
FUSE 19 25A
FUSE 35 10A
FUSE 22 20A
FUSE 30 15A
FUSE 18 15A
FUSE 26 10A
RED/YEL
S240
YEL
13
8
1
2
4
INSTRUMENT CLUSTER
MAIN LIGHT SWITCH
RED/LT GRN
RED
RABS TEST CONNECTOR
BRN/PNK
7
AUXILIARY POWER SOCKET
DK GRN/YEL
5
PARK LAMP/ TRAILER TOW RELAY
ENGINE COMPARTMENT FUSE/RELAY BOX
BLK/WHT
DRIVER'S UNLOCK RELAY
ALL UNLOCK RELAY
ALL LOCK RELAY
TAN/YEL
BATTERY SAVER RELAY
RELAY BOX
ENGINE COMPARTMENT FUSE/RELAY BOX
RABS RESISTOR
PCM POWER DIOD
PCM POWER RELAY
BLK/YEL
FROM MAXI FUSE 5 (DIAGRAM 1 OF 3)
A
YEL
S232
3.0L/ 4.0L ENGINE
2.5L ENGINE
S101
IGNITION COIL
RADIO NOISE CAPACITOR
PRIMARY COIL
SECONDARY COIL
YEL B1
YEL B2
(NOT USED) B3
YEL B4
YEL B5
IGNITION SWITCH
START
RUN
OFF
LOCK
ACC
I2
A1
A2
A3
STA
A4
I1
(NOT USED)
BLK/LT GRN
GRY/YEL
RED/LT BLU
LT GRN/PPL
E
F
G
H
I
TO FUSE 16 (DIAGRAM 3 OF 3)
TO FUSE 27 (DIAGRAM 3 OF 3)
TO FUSE 24 (DIAGRAM 3 OF 3)
TO FUSE 2 (DIAGRAM 3 OF 3)
TO FUSE 11 (DIAGRAM 2 OF 3)
100732