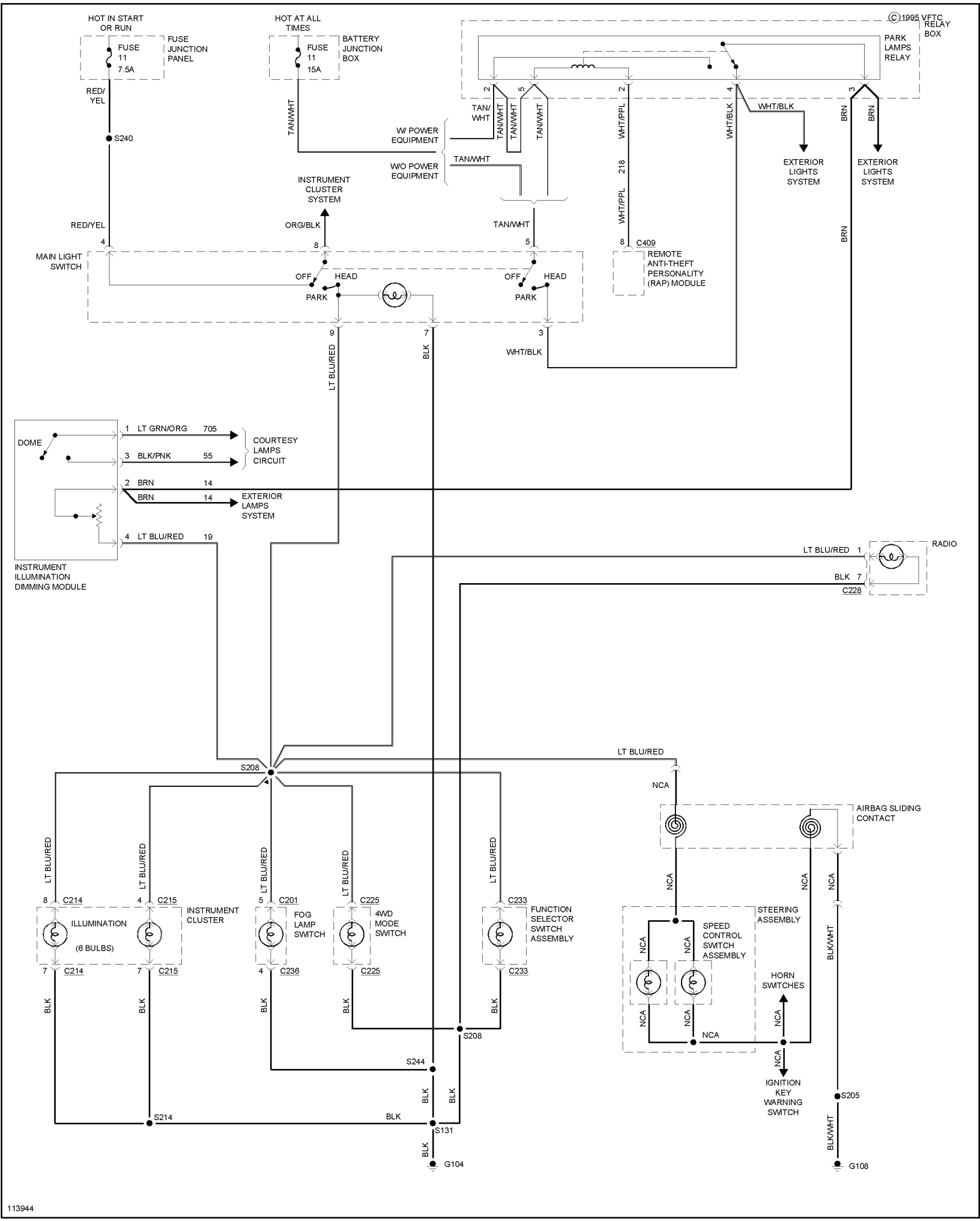
©1995 VFTC
HOT IN START OR RUN
FUSE 11 7.5A
FUSE JUNCTION PANEL
HOT AT ALL TIMES
FUSE 11 15A
BATTERY JUNCTION BOX
RELAY BOX
PARK LAMPS RELAY
RED/YEL
S240
TAN/WHT
W/ POWER EQUIPMENT
W/O POWER EQUIPMENT
TAN/WHT
WHT/PPL
218
WHT/BLK
BRN
EXTERIOR LIGHTS SYSTEM
INSTRUMENT CLUSTER SYSTEM
ORG/BLK
RED/YEL
MAIN LIGHT SWITCH
OFF
HEAD
PARK
C409
REMOTE ANTI-THEFT PERSONALITY (RAP) MODULE
LT BLU/RED
BLK
WHT/BLK
DOME
LT GRN/ORG 705
BLK/PNK 55
COURTESY LAMPS CIRCUIT
BRN 14
EXTERIOR LAMPS SYSTEM
LT BLU/RED 19
INSTRUMENT ILLUMINATION DIMMING MODULE
RADIO
C228
S208
NCA
AIRBAG SLIDING CONTACT
C214
C215
INSTRUMENT CLUSTER
ILLUMINATION
(6 BULBS)
C201
FOG LAMP SWITCH
C225
4WD MODE SWITCH
C233
FUNCTION SELECTOR SWITCH ASSEMBLY
STEERING ASSEMBLY
SPEED CONTROL SWITCH ASSEMBLY
HORN SWITCHES
IGNITION KEY WARNING SWITCH
BLK/WHT
C236
S244
S214
S131
G104
S205
G108

113944