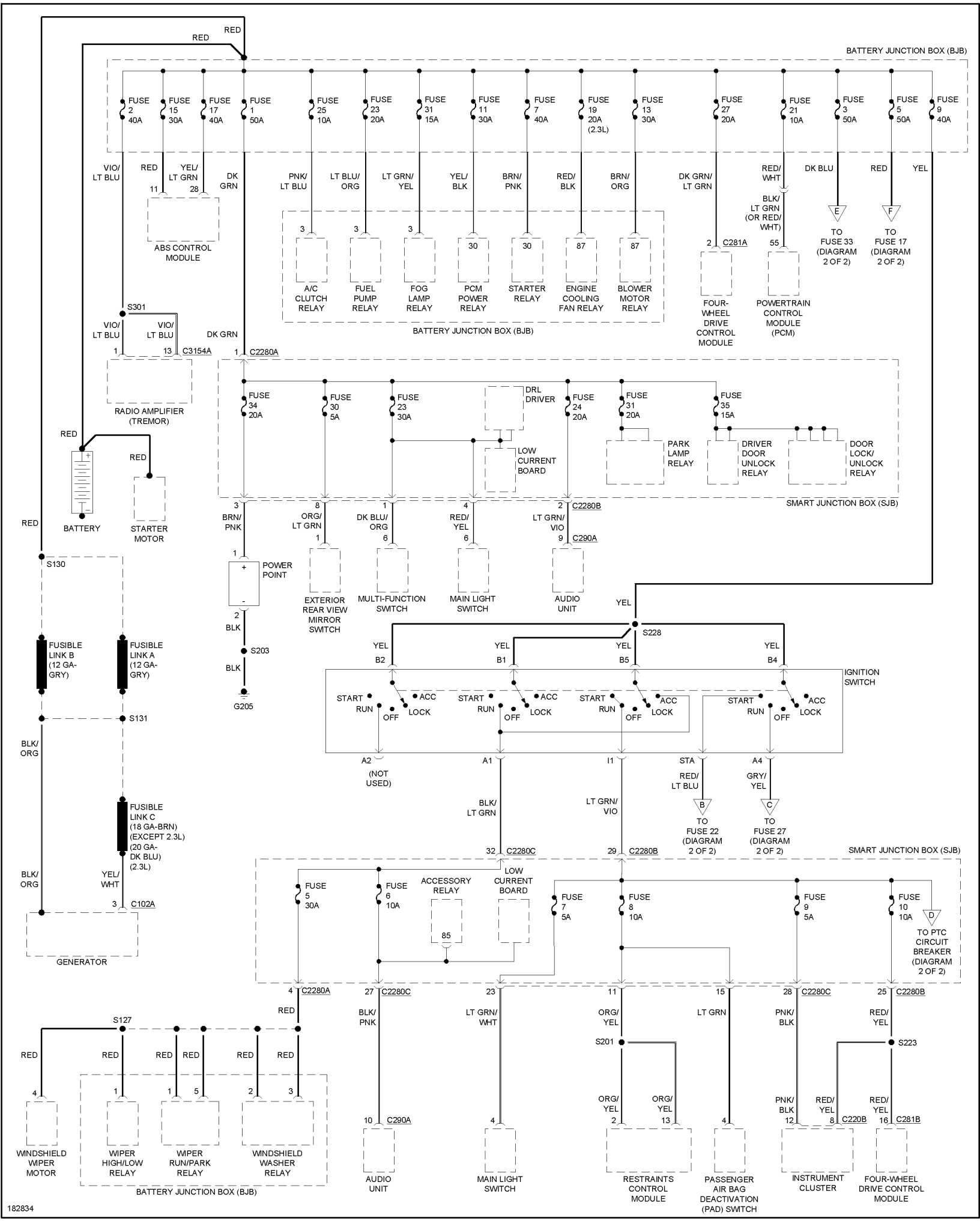
BATTERY JUNCTION BOX (BJB)
FUSE 2 40A
FUSE 15 30A
FUSE 17 40A
FUSE 1 50A
FUSE 25 10A
FUSE 23 20A
FUSE 31 15A
FUSE 11 30A
FUSE 7 40A
FUSE 19 20A (2.3L)
FUSE 13 30A
FUSE 27 20A
FUSE 21 10A
FUSE 3 50A
FUSE 5 50A
FUSE 9 40A
RED
VIO/ LT BLU
YEL/ LT GRN
DK GRN
PNK/ LT BLU
LT BLU/ ORG
LT GRN/ YEL
YEL/ BLK
BRN/ PNK
RED/ BLK
BRN/ ORG
DK GRN/ LT GRN
RED/ WHT
DK BLU
YEL
BLK/ LT GRN (OR RED/ WHT)
ABS CONTROL MODULE
A/C CLUTCH RELAY
FUEL PUMP RELAY
FOG LAMP RELAY
PCM POWER RELAY
STARTER RELAY
ENGINE COOLING FAN RELAY
BLOWER MOTOR RELAY
C281A
FOUR-WHEEL DRIVE CONTROL MODULE
POWERTRAIN CONTROL MODULE (PCM)
TO FUSE 33 (DIAGRAM 2 OF 2)
TO FUSE 17 (DIAGRAM 2 OF 2)
S301
C3154A
C2280A
RADIO AMPLIFIER (TREMOR)
FUSE 34 20A
FUSE 30 5A
FUSE 23 30A
DRL DRIVER
FUSE 24 20A
FUSE 31 20A
FUSE 35 15A
LOW CURRENT BOARD
PARK LAMP RELAY
DRIVER DOOR UNLOCK RELAY
DOOR LOCK/ UNLOCK RELAY
SMART JUNCTION BOX (SJB)
BATTERY
STARTER MOTOR
BRN/ PNK
ORG/ LT GRN
DK BLU/ ORG
RED/ YEL
LT GRN/ VIO
C2280B
C290A
POWER POINT
EXTERIOR REAR VIEW MIRROR SWITCH
MULTI-FUNCTION SWITCH
MAIN LIGHT SWITCH
AUDIO UNIT
S130
S228
BLK
S203
G205
FUSIBLE LINK B (12 GA-GRY)
FUSIBLE LINK A (12 GA-GRY)
S131
BLK/ ORG
YEL
B2
B1
B5
B4
IGNITION SWITCH
START
RUN
OFF
ACC
LOCK
A2
(NOT USED)
A1
I1
STA
A4
RED/ LT BLU
GRY/ YEL
BLK/ LT GRN
LT GRN/ VIO
TO FUSE 22 (DIAGRAM 2 OF 2)
TO FUSE 27 (DIAGRAM 2 OF 2)
C2280C
FUSIBLE LINK C (18 GA-BRN) (EXCEPT 2.3L) (20 GA-DK BLU) (2.3L)
YEL/ WHT
C102A
GENERATOR
FUSE 5 30A
FUSE 6 10A
ACCESSORY RELAY
85
FUSE 7 5A
FUSE 8 10A
FUSE 9 5A
FUSE 10 10A
TO PTC CIRCUIT BREAKER (DIAGRAM 2 OF 2)
BLK/ PNK
LT GRN/ WHT
ORG/ YEL
LT GRN
PNK/ BLK
RED/ YEL
S127
S201
S223
WINDSHIELD WIPER MOTOR
WIPER HIGH/LOW RELAY
WIPER RUN/PARK RELAY
WINDSHIELD WASHER RELAY
C290A
C220B
C281B
AUDIO UNIT
MAIN LIGHT SWITCH
RESTRAINTS CONTROL MODULE
PASSENGER AIR BAG DEACTIVATION (PAD) SWITCH
INSTRUMENT CLUSTER
FOUR-WHEEL DRIVE CONTROL MODULE
182834