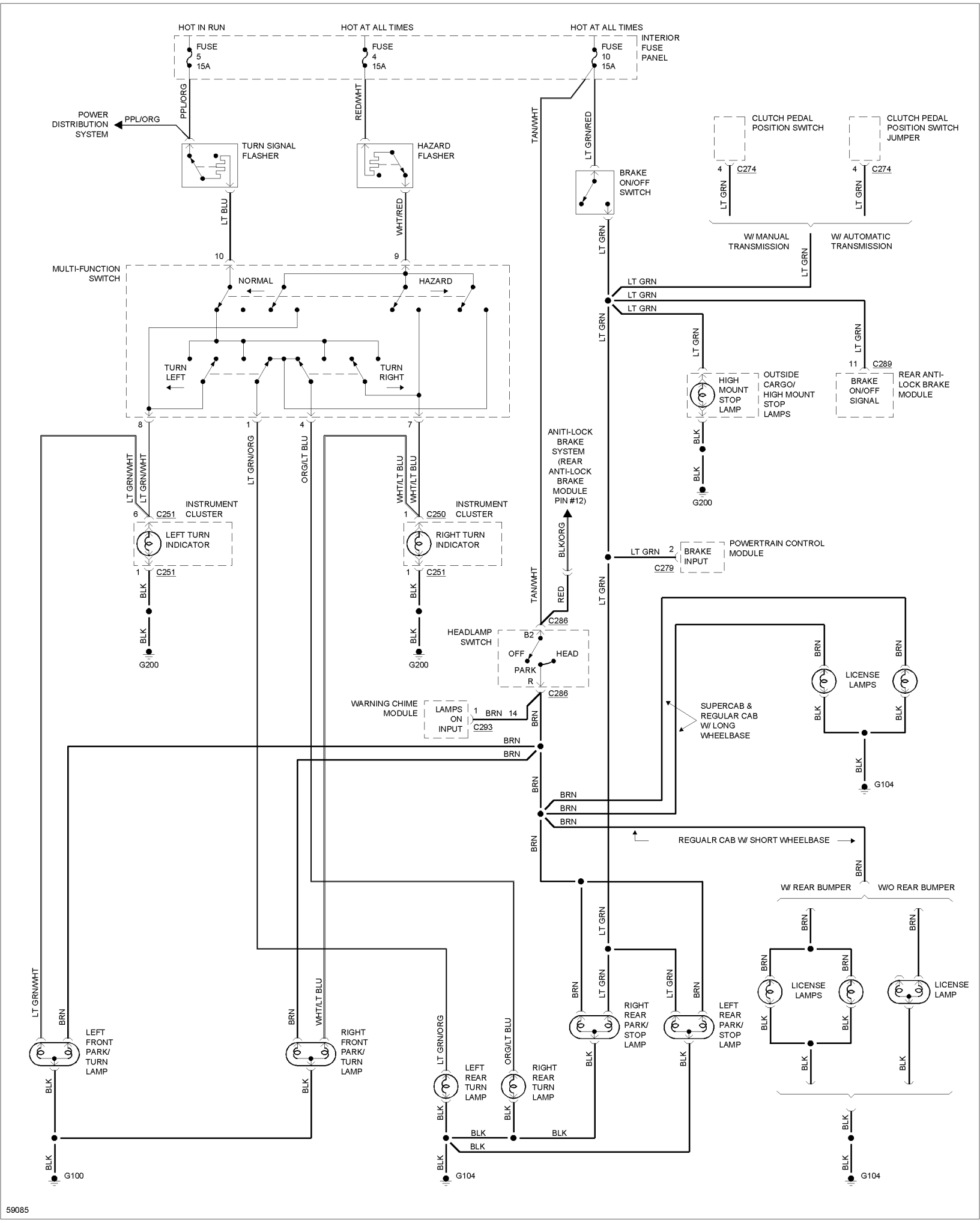
HOT IN RUN
HOT AT ALL TIMES
HOT AT ALL TIMES
FUSE 5 15A
FUSE 4 15A
FUSE 10 15A
INTERIOR FUSE PANEL
POWER DISTRIBUTION SYSTEM
PPL/ORG
PPL/ORG
RED/WHT
TAN/WHT
LT GRN/RED
TURN SIGNAL FLASHER
HAZARD FLASHER
BRAKE ON/OFF SWITCH
CLUTCH PEDAL POSITION SWITCH
CLUTCH PEDAL POSITION SWITCH JUMPER
C274
LT GRN
W/ MANUAL TRANSMISSION
W/ AUTOMATIC TRANSMISSION
LT BLU
WHT/RED
MULTI-FUNCTION SWITCH
NORMAL
HAZARD
TURN LEFT
TURN RIGHT
HIGH MOUNT STOP LAMP
OUTSIDE CARGO/ HIGH MOUNT STOP LAMPS
C289
BRAKE ON/OFF SIGNAL
REAR ANTI-LOCK BRAKE MODULE
BLK
G200
LT GRN/WHT
LT GRN/ORG
ORG/LT BLU
WHT/LT BLU
INSTRUMENT CLUSTER
C251
C250
LEFT TURN INDICATOR
RIGHT TURN INDICATOR
ANITI-LOCK BRAKE SYSTEM (REAR ANTI-LOCK BRAKE MODULE PIN #12)
BLK/ORG
BRAKE INPUT
POWERTRAIN CONTROL MODULE
C279
RED
C286
HEADLAMP SWITCH
B2
OFF
HEAD
PARK
R
WARNING CHIME MODULE
LAMPS ON INPUT
C293
BRN
LICENSE LAMPS
SUPERCAB & REGULAR CAB W/ LONG WHEELBASE
G104
REGUALR CAB W/ SHORT WHEELBASE
W/ REAR BUMPER
W/O REAR BUMPER
LICENSE LAMP
LEFT FRONT PARK/ TURN LAMP
RIGHT FRONT PARK/ TURN LAMP
LEFT REAR TURN LAMP
RIGHT REAR TURN LAMP
RIGHT REAR PARK/ STOP LAMP
LEFT REAR PARK/ STOP LAMP
G100
59085