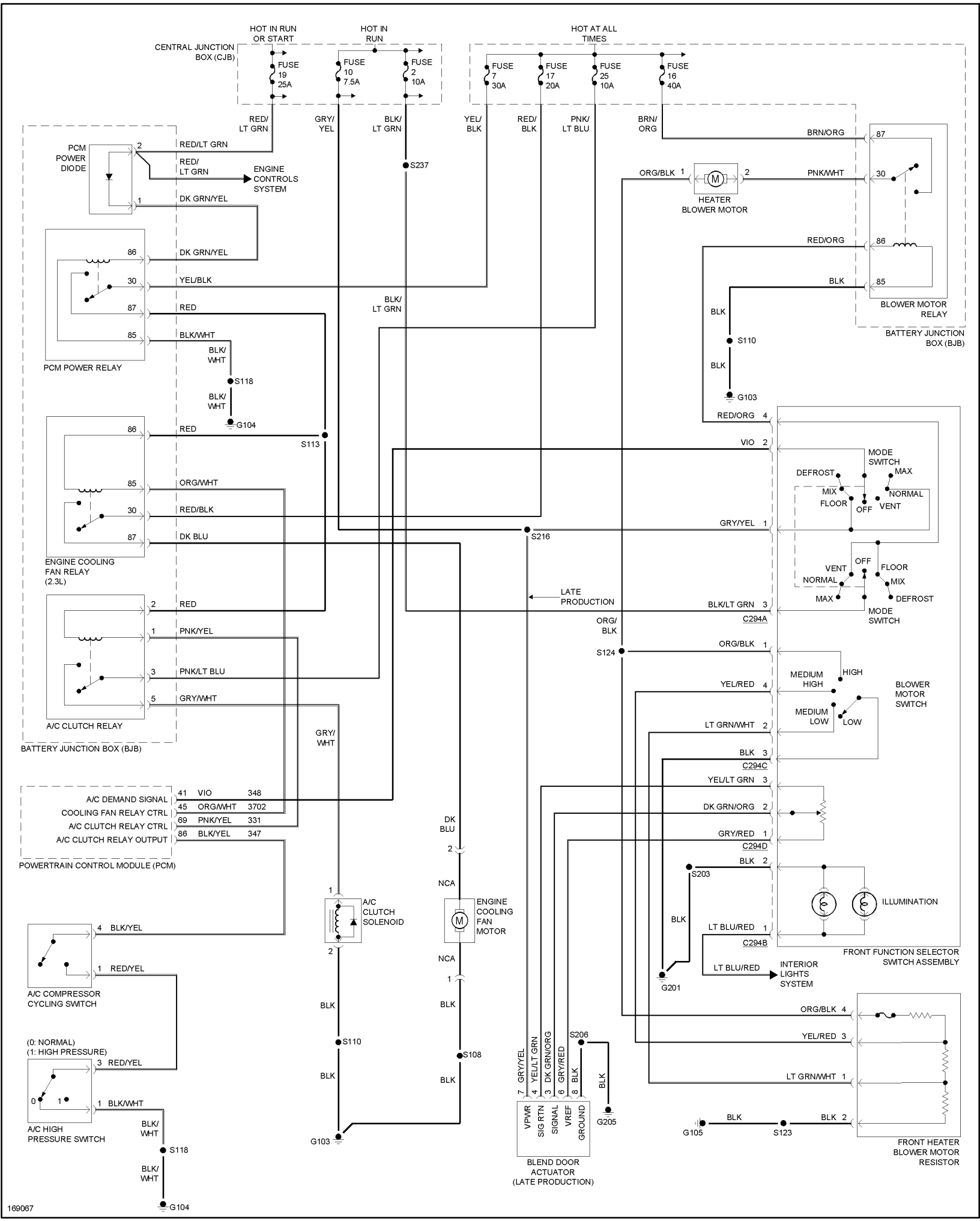
HOT IN RUN OR START
HOT IN RUN
HOT AT ALL TIMES
CENTRAL JUNCTION BOX (CJB)
FUSE 19 25A
FUSE 10 7.5A
FUSE 2 10A
FUSE 7 30A
FUSE 17 20A
FUSE 25 10A
FUSE 16 40A
RED/ LT GRN
GRY/ YEL
BLK/ LT GRN
YEL/ BLK
RED/ BLK
PNK/ LT BLU
BRN/ ORG
PCM POWER DIODE
RED/LT GRN
RED/ LT GRN
ENGINE CONTROLS SYSTEM
DK GRN/YEL
S237
ORG/BLK
HEATER BLOWER MOTOR
PNK/WHT
BRN/ORG
BLOWER MOTOR RELAY
BATTERY JUNCTION BOX (BJB)
RED/ORG
BLK
S110
G103
PCM POWER RELAY
YEL/BLK
RED
BLK/WHT
BLK/ WHT
S118
G104
S113
ENGINE COOLING FAN RELAY (2.3L)
ORG/WHT
RED/BLK
DK BLU
S216
VIO
MODE SWITCH
DEFROST
MAX
MIX
NORMAL
FLOOR
OFF
VENT
GRY/YEL
LATE PRODUCTION
BLK/LT GRN
C294A
A/C CLUTCH RELAY
PNK/YEL
PNK/LT BLU
GRY/WHT
ORG/ BLK
S124
ORG/BLK
MEDIUM HIGH
HIGH
BLOWER MOTOR SWITCH
YEL/RED
MEDIUM LOW
LOW
LT GRN/WHT
BLK
C294C
YEL/LT GRN
DK GRN/ORG
GRY/RED
C294D
POWERTRAIN CONTROL MODULE (PCM)
A/C DEMAND SIGNAL 41 VIO 348
COOLING FAN RELAY CTRL 45 ORG/WHT 3702
A/C CLUTCH RELAY CTRL 69 PNK/YEL 331
A/C CLUTCH RELAY OUTPUT 86 BLK/YEL 347
DK BLU
NCA
A/C CLUTCH SOLENOID
ENGINE COOLING FAN MOTOR
S203
ILLUMINATION
LT BLU/RED
C294B
FRONT FUNCTION SELECTOR SWITCH ASSEMBLY
INTERIOR LIGHTS SYSTEM
G201
A/C COMPRESSOR CYCLING SWITCH
BLK/YEL
RED/YEL
(0: NORMAL)
(1: HIGH PRESSURE)
A/C HIGH PRESSURE SWITCH
S110
S108
S206
G205
VPWR
SIG RTN
SIGNAL
VREF
GROUND
BLEND DOOR ACTUATOR (LATE PRODUCTION)
G105
S123
FRONT HEATER BLOWER MOTOR RESISTOR
169067