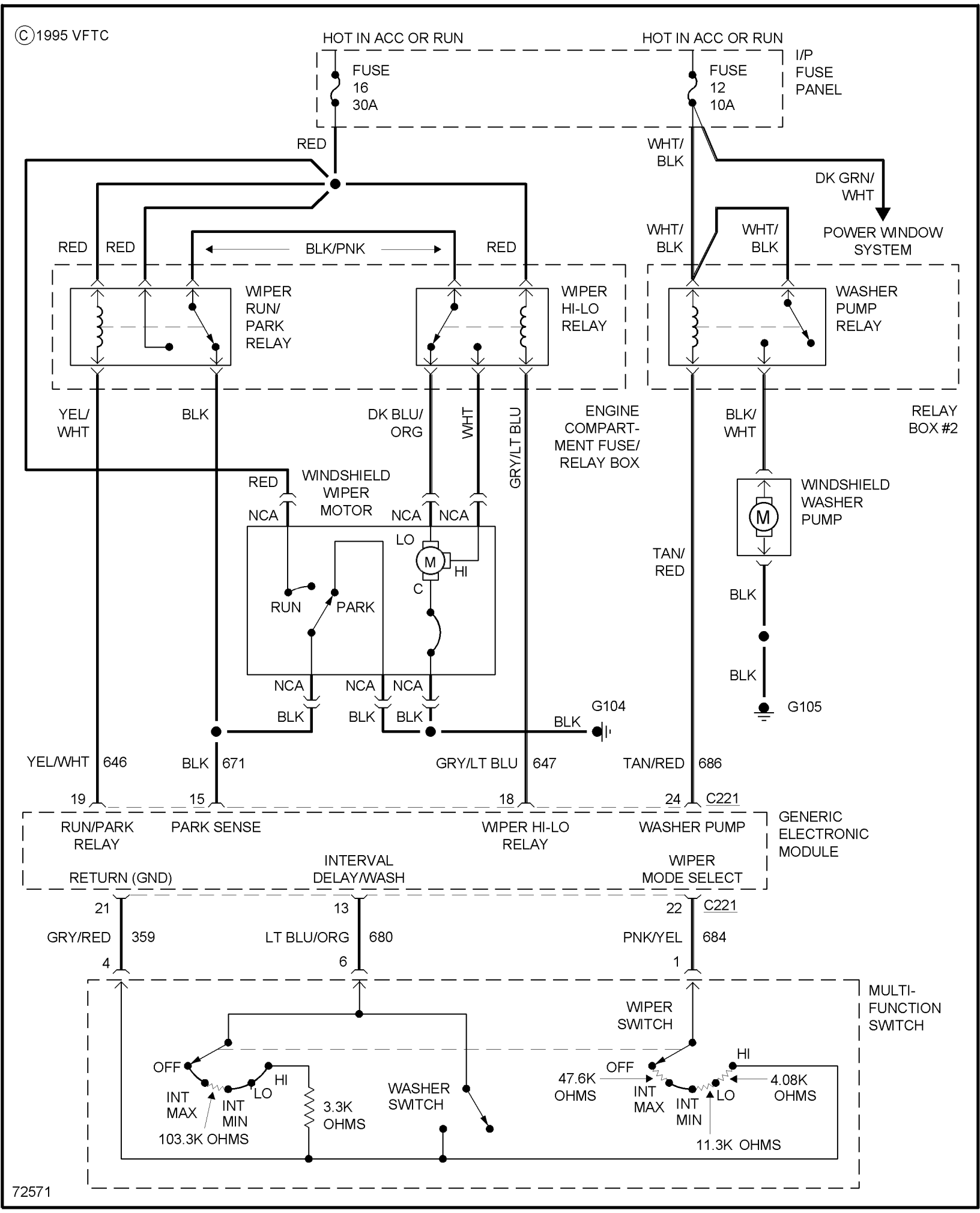
©1995 VFTC
HOT IN ACC OR RUN
HOT IN ACC OR RUN
FUSE 16 30A
FUSE 12 10A
I/P FUSE PANEL
RED
WHT/ BLK
DK GRN/ WHT
POWER WINDOW SYSTEM
RED
RED
BLK/PNK
RED
WHT/ BLK
WHT/ BLK
WIPER RUN/ PARK RELAY
WIPER HI-LO RELAY
WASHER PUMP RELAY
YEL/ WHT
BLK
DK BLU/ ORG
WHT
GRY/LT BLU
ENGINE COMPART-MENT FUSE/ RELAY BOX
BLK/ WHT
RELAY BOX #2
RED
WINDSHIELD WIPER MOTOR
NCA
NCA
NCA
LO
M
HI
C
RUN
PARK
NCA
NCA
NCA
BLK
BLK
BLK
BLK
G104
WINDSHIELD WASHER PUMP
M
TAN/ RED
BLK
BLK
G105
YEL/WHT 646
BLK 671
GRY/LT BLU 647
TAN/RED 686
19
15
18
24
C221
RUN/PARK RELAY
PARK SENSE
WIPER HI-LO RELAY
WASHER PUMP
GENERIC ELECTRONIC MODULE
RETURN (GND)
INTERVAL DELAY/WASH
WIPER MODE SELECT
21
13
22
C221
GRY/RED 359
LT BLU/ORG 680
PNK/YEL 684
4
6
1
MULTI-FUNCTION SWITCH
WIPER SWITCH
OFF
INT MAX
INT MIN
LO
HI
103.3K OHMS
3.3K OHMS
WASHER SWITCH
OFF
47.6K OHMS
INT MAX
INT MIN
LO
HI
4.08K OHMS
11.3K OHMS
72571