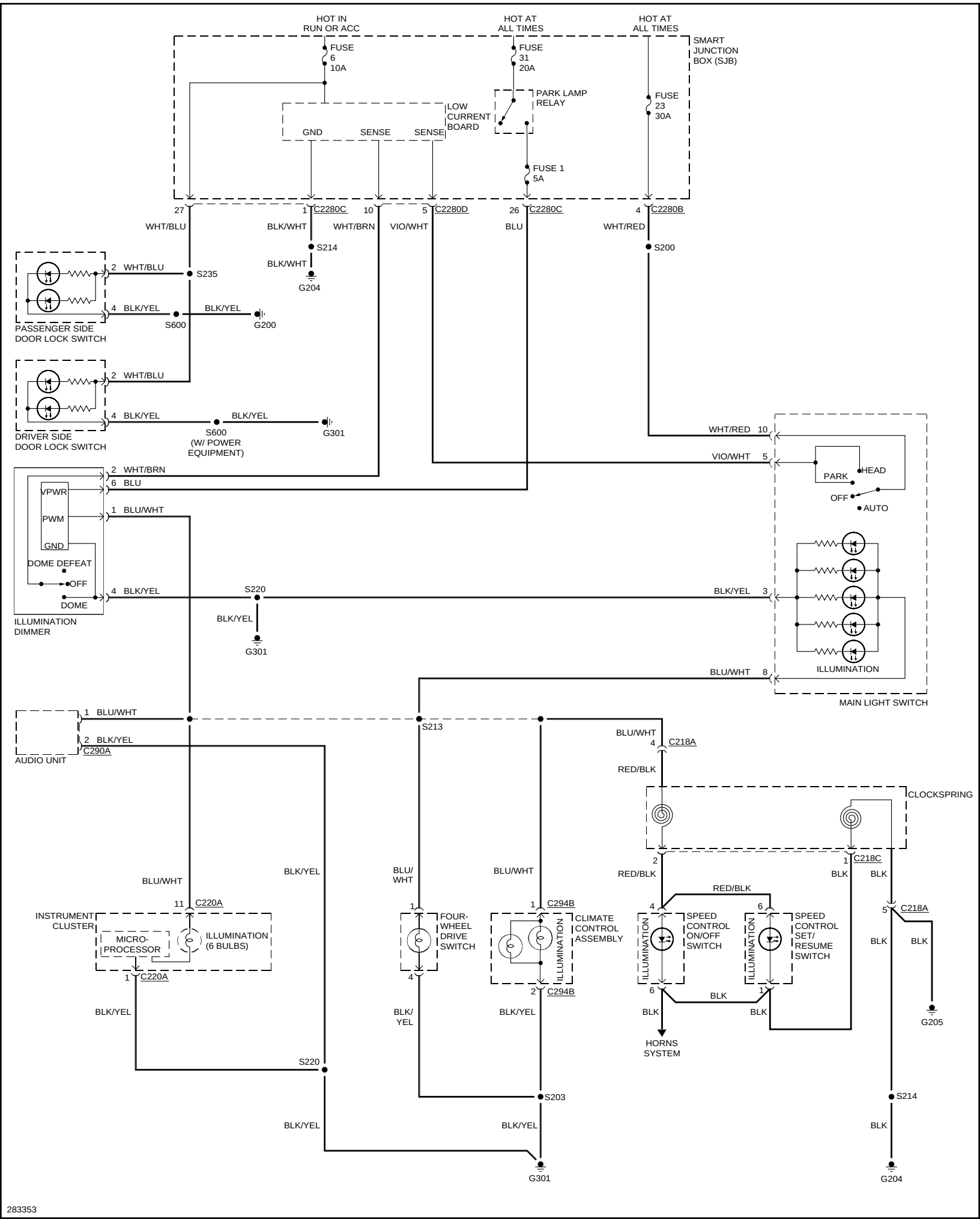
HOT IN RUN OR ACC
HOT AT ALL TIMES
HOT AT ALL TIMES
SMART JUNCTION BOX (SJB)
FUSE 6 10A
FUSE 31 20A
FUSE 23 30A
PARK LAMP RELAY
LOW CURRENT BOARD
GND
SENSE
SENSE
FUSE 1 5A
27
1 C2280C
10
5 C2280D
26 C2280C
4 C2280B
WHT/BLU
BLK/WHT
WHT/BRN
VIO/WHT
BLU
WHT/RED
S214
S200
BLK/WHT
G204
2 WHT/BLU
S235
4 BLK/YEL
BLK/YEL
S600
G200
PASSENGER SIDE DOOR LOCK SWITCH
2 WHT/BLU
4 BLK/YEL
BLK/YEL
S600 (W/ POWER EQUIPMENT)
G301
DRIVER SIDE DOOR LOCK SWITCH
WHT/RED 10
VIO/WHT 5
PARK
HEAD
OFF
AUTO
2 WHT/BRN
6 BLU
VPWR
PWM
GND
1 BLU/WHT
DOME DEFEAT
OFF
DOME
4 BLK/YEL
S220
BLK/YEL
G301
ILLUMINATION DIMMER
BLK/YEL 3
ILLUMINATION
BLU/WHT 8
MAIN LIGHT SWITCH
1 BLU/WHT
2 BLK/YEL
C290A
AUDIO UNIT
S213
BLU/WHT
4 C218A
RED/BLK
CLOCKSPRING
2
1 C218C
RED/BLK
BLK
BLK
BLU/WHT
BLK/YEL
BLU/ WHT
BLU/WHT
RED/BLK
11 C220A
INSTRUMENT CLUSTER
MICRO-PROCESSOR
ILLUMINATION (6 BULBS)
1 C220A
1
FOUR-WHEEL DRIVE SWITCH
4
1 C294B
CLIMATE CONTROL ASSEMBLY
ILLUMINATION
2 C294B
4
SPEED CONTROL ON/OFF SWITCH
ILLUMINATION
6
6
SPEED CONTROL SET/ RESUME SWITCH
ILLUMINATION
1
5 C218A
BLK
BLK
BLK
BLK
BLK
BLK
BLK/YEL
BLK/ YEL
BLK/YEL
HORNS SYSTEM
G205
S220
S203
S214
BLK/YEL
BLK/YEL
BLK
G301
G204
283353