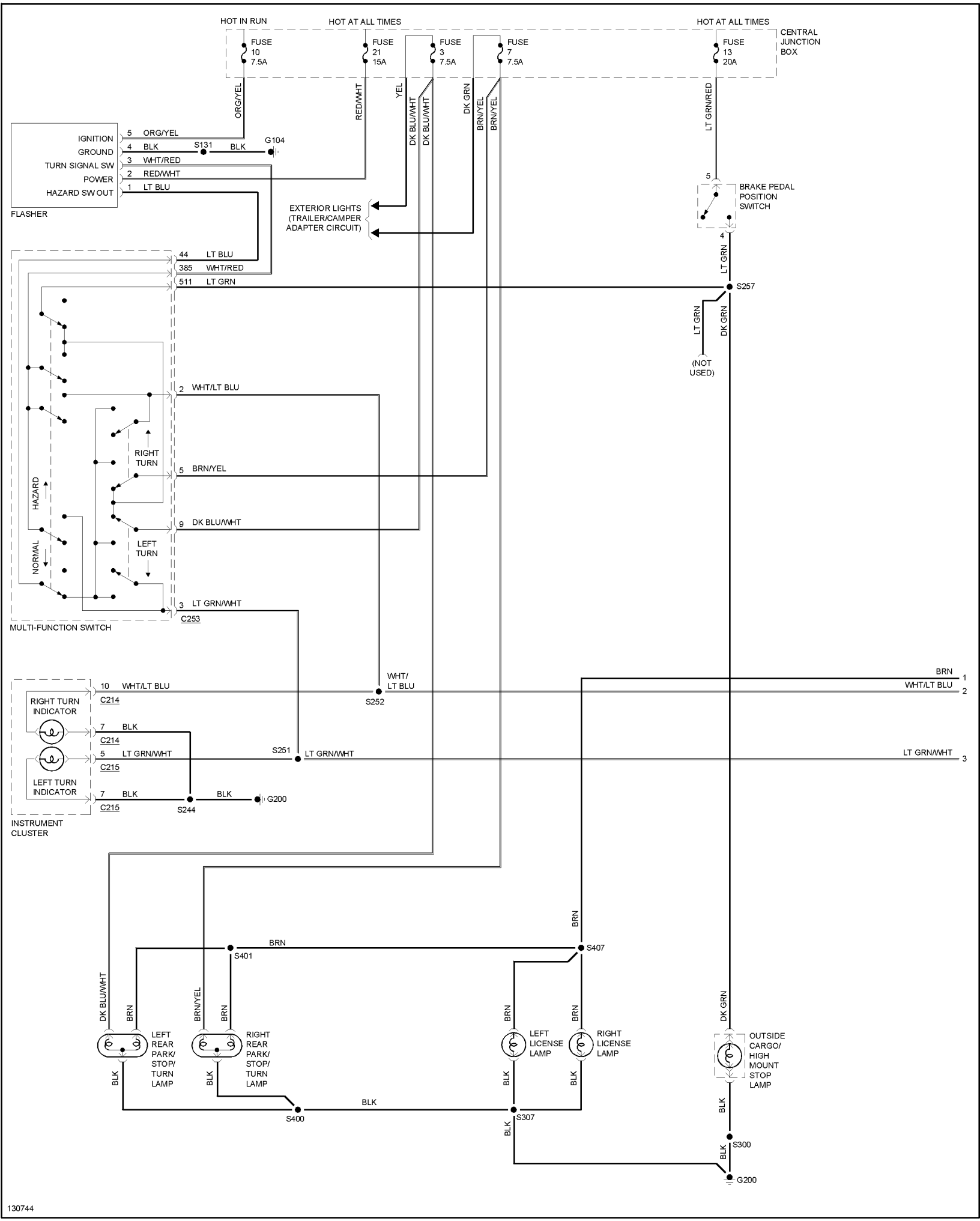
HOT IN RUN
HOT AT ALL TIMES
HOT AT ALL TIMES
CENTRAL JUNCTION BOX
FUSE 10 7.5A
FUSE 21 15A
FUSE 3 7.5A
FUSE 7 7.5A
FUSE 13 20A
ORG/YEL
RED/WHT
YEL
DK BLU/WHT
DK BLU/WHT
DK GRN
BRN/YEL
BRN/YEL
LT GRN/RED
IGNITION
GROUND
TURN SIGNAL SW
POWER
HAZARD SW OUT
5 ORG/YEL
4 BLK
3 WHT/RED
2 RED/WHT
1 LT BLU
S131
BLK
G104
FLASHER
EXTERIOR LIGHTS (TRAILER/CAMPER ADAPTER CIRCUIT)
5
BRAKE PEDAL POSITION SWITCH
4
LT GRN
S257
LT GRN
DK GRN
(NOT USED)
44 LT BLU
385 WHT/RED
511 LT GRN
2 WHT/LT BLU
5 BRN/YEL
9 DK BLU/WHT
3 LT GRN/WHT
C253
RIGHT TURN
LEFT TURN
HAZARD
NORMAL
MULTI-FUNCTION SWITCH
10 WHT/LT BLU
C214
WHT/ LT BLU
S252
BRN
1
WHT/LT BLU
2
RIGHT TURN INDICATOR
7 BLK
C214
5 LT GRN/WHT
C215
S251
LT GRN/WHT
LT GRN/WHT
3
LEFT TURN INDICATOR
7 BLK
C215
S244
BLK
G200
INSTRUMENT CLUSTER
BRN
S401
S407
BRN
DK BLU/WHT
BRN
BRN/YEL
BRN
BRN
BRN
DK GRN
LEFT REAR PARK/ STOP/ TURN LAMP
RIGHT REAR PARK/ STOP/ TURN LAMP
LEFT LICENSE LAMP
RIGHT LICENSE LAMP
OUTSIDE CARGO/ HIGH MOUNT STOP LAMP
BLK
BLK
BLK
BLK
BLK
S400
BLK
S307
BLK
BLK
S300
BLK
G200
130744