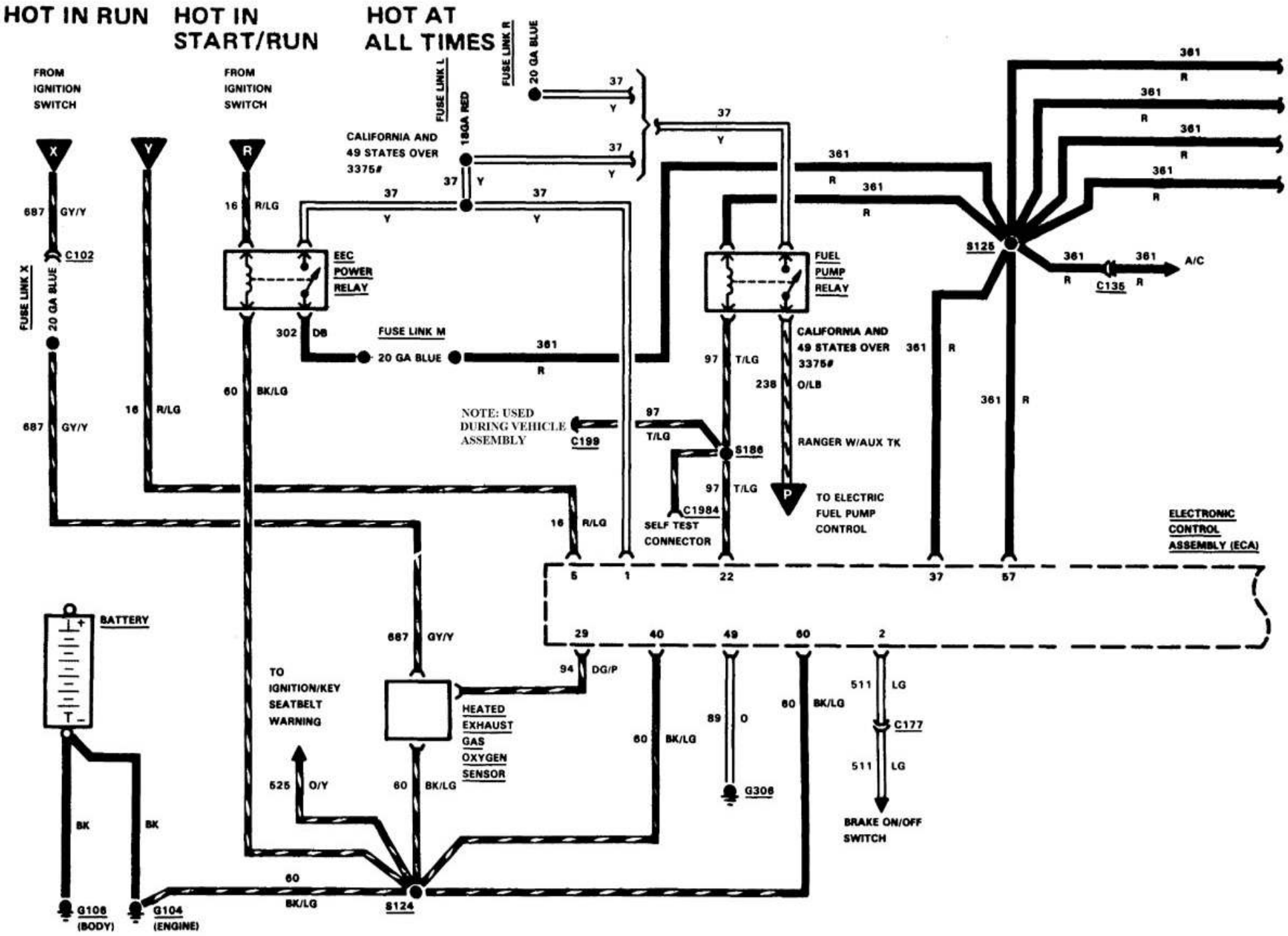
HOT IN RUN
HOT IN START/RUN
HOT AT ALL TIMES
FROM IGNITION SWITCH
FROM IGNITION SWITCH
FUSE LINK L
18GA RED
FUSE LINK R
20 GA BLUE
CALIFORNIA AND 49 STATES OVER 3375#
687 GY/Y
C102
FUSE LINK X
20 GA BLUE
687 GY/Y
16 R/LG
16 R/LG
EEC POWER RELAY
302 DB
FUSE LINK M
20 GA BLUE
361 R
60 BK/LG
NOTE: USED DURING VEHICLE ASSEMBLY
C199
97 T/LG
S186
C1984
SELF TEST CONNECTOR
FUEL PUMP RELAY
CALIFORNIA AND 49 STATES OVER 3375#
97 T/LG
238 O/LB
RANGER W/AUX TK
TO ELECTRIC FUEL PUMP CONTROL
S125
A/C
C135
ELECTRONIC CONTROL ASSEMBLY (ECA)
BATTERY
687 GY/Y
TO IGNITION/KEY SEATBELT WARNING
HEATED EXHAUST GAS OXYGEN SENSOR
525 O/Y
60 BK/LG
94 DG/P
60 BK/LG
89 O
G306
511 LG
C177
511 LG
BRAKE ON/OFF SWITCH
BK
BK
G108 (BODY)
G104 (ENGINE)
60 BK/LG
S124