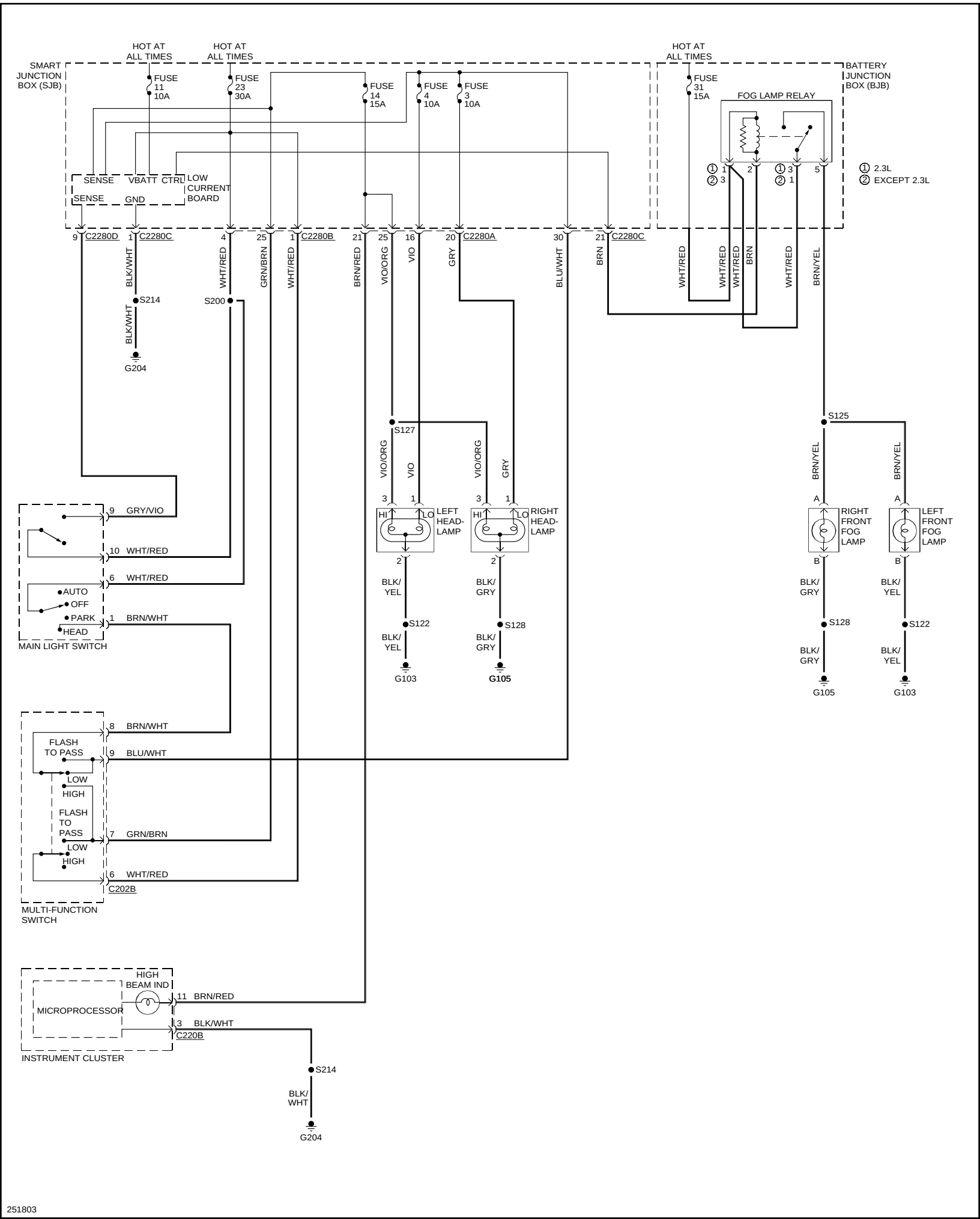
SMART JUNCTION BOX (SJB)
HOT AT ALL TIMES
FUSE 11 10A
FUSE 23 30A
FUSE 14 15A
FUSE 4 10A
FUSE 3 10A
SENSE
VBATT
CTRL
LOW CURRENT BOARD
SENSE
GND
BATTERY JUNCTION BOX (BJB)
FUSE 31 15A
FOG LAMP RELAY
① 2.3L
② EXCEPT 2.3L
C2280D
C2280C
C2280B
C2280A
BLK/WHT
WHT/RED
GRN/BRN
BRN/RED
VIO/ORG
VIO
GRY
BLU/WHT
BRN
BRN/YEL
S214
S200
G204
S127
S125
GRY/VIO
WHT/RED
BRN/WHT
AUTO
OFF
PARK
HEAD
MAIN LIGHT SWITCH
HI
LO
LEFT HEAD-LAMP
RIGHT HEAD-LAMP
RIGHT FRONT FOG LAMP
LEFT FRONT FOG LAMP
BLK/YEL
BLK/GRY
S122
S128
G103
G105
FLASH TO PASS
LOW
HIGH
BLU/WHT
GRN/BRN
C202B
MULTI-FUNCTION SWITCH
HIGH BEAM IND
MICROPROCESSOR
BRN/RED
BLK/WHT
C220B
INSTRUMENT CLUSTER
BLK/WHT

251803