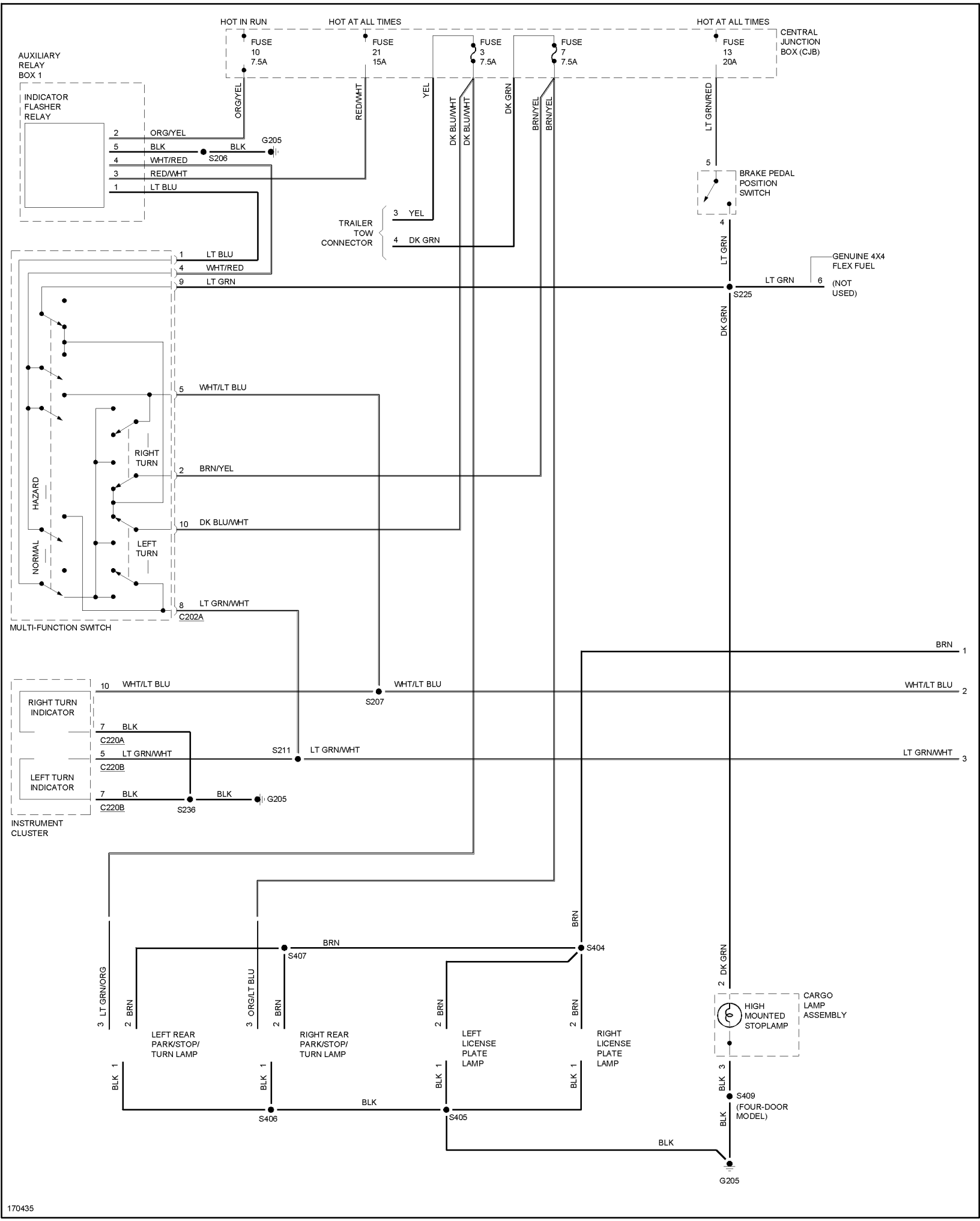
HOT IN RUN
HOT AT ALL TIMES
HOT AT ALL TIMES
FUSE 10 7.5A
FUSE 21 15A
FUSE 3 7.5A
FUSE 7 7.5A
FUSE 13 20A
CENTRAL JUNCTION BOX (CJB)
AUXILIARY RELAY BOX 1
INDICATOR FLASHER RELAY
2 ORG/YEL
5 BLK
4 WHT/RED
3 RED/WHT
1 LT BLU
ORG/YEL
BLK
G205
S206
RED/WHT
YEL
DK BLU/WHT
DK BLU/WHT
DK GRN
BRN/YEL
BRN/YEL
LT GRN/RED
5
BRAKE PEDAL POSITION SWITCH
TRAILER TOW CONNECTOR
3 YEL
4 DK GRN
4
LT GRN
GENUINE 4X4 FLEX FUEL
LT GRN
6
(NOT USED)
S225
DK GRN
1 LT BLU
4 WHT/RED
9 LT GRN
5 WHT/LT BLU
RIGHT TURN
2 BRN/YEL
HAZARD
10 DK BLU/WHT
LEFT TURN
NORMAL
8 LT GRN/WHT
C202A
MULTI-FUNCTION SWITCH
BRN
1
10 WHT/LT BLU
WHT/LT BLU
S207
WHT/LT BLU
2
RIGHT TURN INDICATOR
7 BLK
C220A
S211
LT GRN/WHT
LT GRN/WHT
3
5 LT GRN/WHT
C220B
LEFT TURN INDICATOR
7 BLK
C220B
S236
BLK
G205
INSTRUMENT CLUSTER
BRN
S407
S404
BRN
3 LT GRN/ORG
2 BRN
3 ORG/LT BLU
2 BRN
2 BRN
2 BRN
2 DK GRN
HIGH MOUNTED STOPLAMP
CARGO LAMP ASSEMBLY
LEFT REAR PARK/STOP/ TURN LAMP
RIGHT REAR PARK/STOP/ TURN LAMP
LEFT LICENSE PLATE LAMP
RIGHT LICENSE PLATE LAMP
BLK 1
BLK 1
BLK 1
BLK 1
BLK 3
S409
(FOUR-DOOR MODEL)
BLK
S406
BLK
S405
BLK
G205
170435