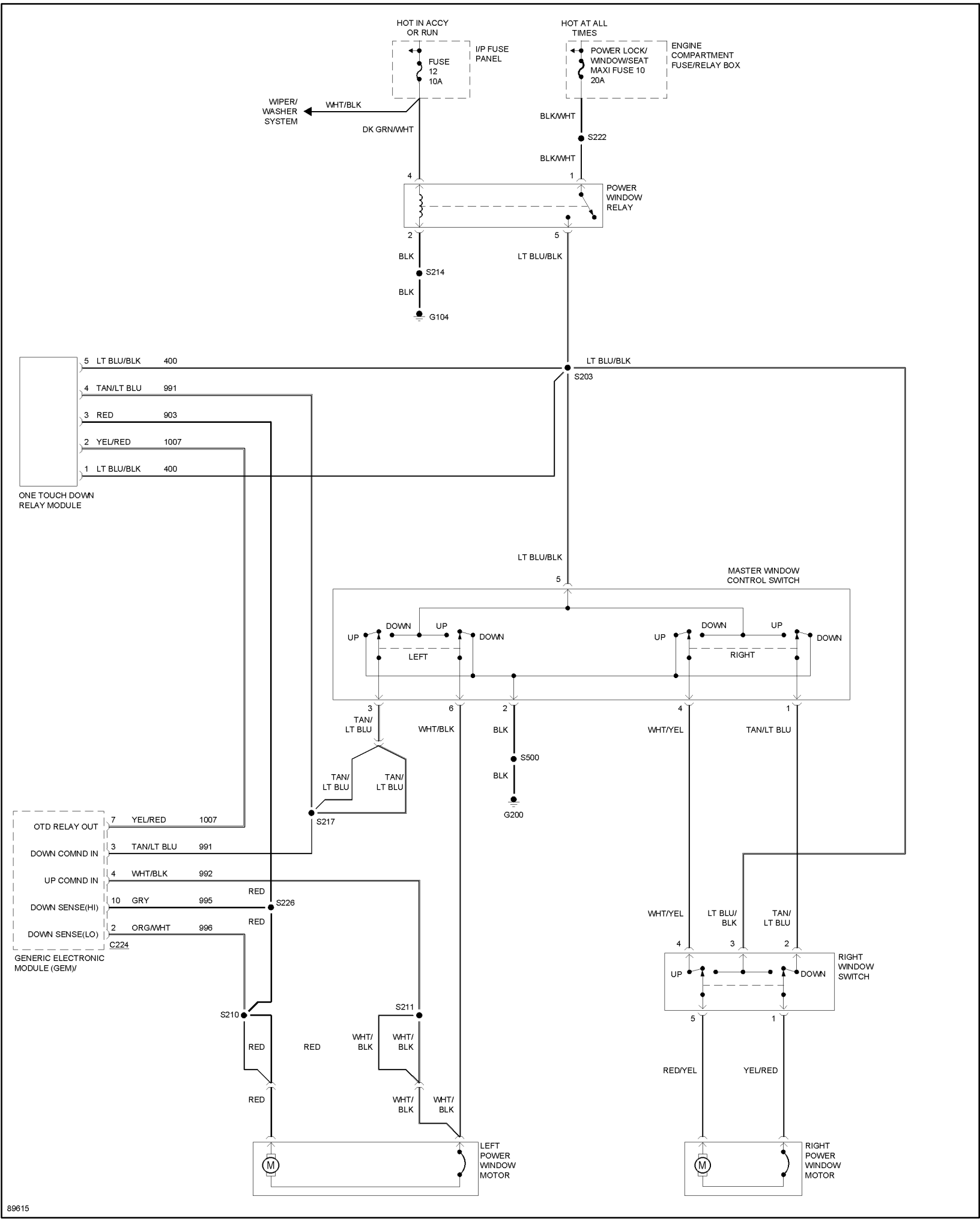
HOT IN ACCY OR RUN
I/P FUSE PANEL
FUSE 12 10A
HOT AT ALL TIMES
POWER LOCK/ WINDOW/SEAT MAXI FUSE 10 20A
ENGINE COMPARTMENT FUSE/RELAY BOX
WIPER/ WASHER SYSTEM
WHT/BLK
DK GRN/WHT
BLK/WHT
S222
BLK/WHT
POWER WINDOW RELAY
BLK
S214
BLK
G104
LT BLU/BLK
5 LT BLU/BLK 400
4 TAN/LT BLU 991
3 RED 903
2 YEL/RED 1007
1 LT BLU/BLK 400
ONE TOUCH DOWN RELAY MODULE
LT BLU/BLK
S203
LT BLU/BLK
MASTER WINDOW CONTROL SWITCH
UP
DOWN
LEFT
RIGHT
TAN/ LT BLU
WHT/BLK
BLK
S500
G200
WHT/YEL
TAN/LT BLU
TAN/ LT BLU
S217
OTD RELAY OUT
DOWN COMND IN
UP COMND IN
DOWN SENSE(HI)
DOWN SENSE(LO)
7 YEL/RED 1007
3 TAN/LT BLU 991
4 WHT/BLK 992
10 GRY 995
2 ORG/WHT 996
C224
GENERIC ELECTRONIC MODULE (GEM)/
RED
S226
S210
S211
WHT/ BLK
LT BLU/ BLK
RIGHT WINDOW SWITCH
RED/YEL
YEL/RED
LEFT POWER WINDOW MOTOR
RIGHT POWER WINDOW MOTOR
M
89615